CESSNA 208
CARAVAN

CESSNA 208 CARAVAN

Note: The Cessna 208 Caravan is not an approved smokejumping aircraft. It is in the evaluation process for an approved aircraft.

Accessories Required For Smokejumping:

Primary Vertical Anchor:	MEDC-804- Vertical Anchor Cable for Cessna 208 STC Strength: 2,000 pounds STC #: pending
Secondary Horizontal Anchor:	MEDC-791- Horizontal Cable Shock Absorber for Cessna 208 MEDC-808- Cessna 208 Caravan Horizontal Anchor cable--Forward attachment Point STC Strength: 750 pounds STC #: Pending
Jump Door, Jump Step, & Step Attachment:	MEDC-759- Stepbasket (universal), Smokejumper Aircraft MEDC-794- Universal Step Strut MEDC-792- Cessna 208 Jump door STC #: Pending

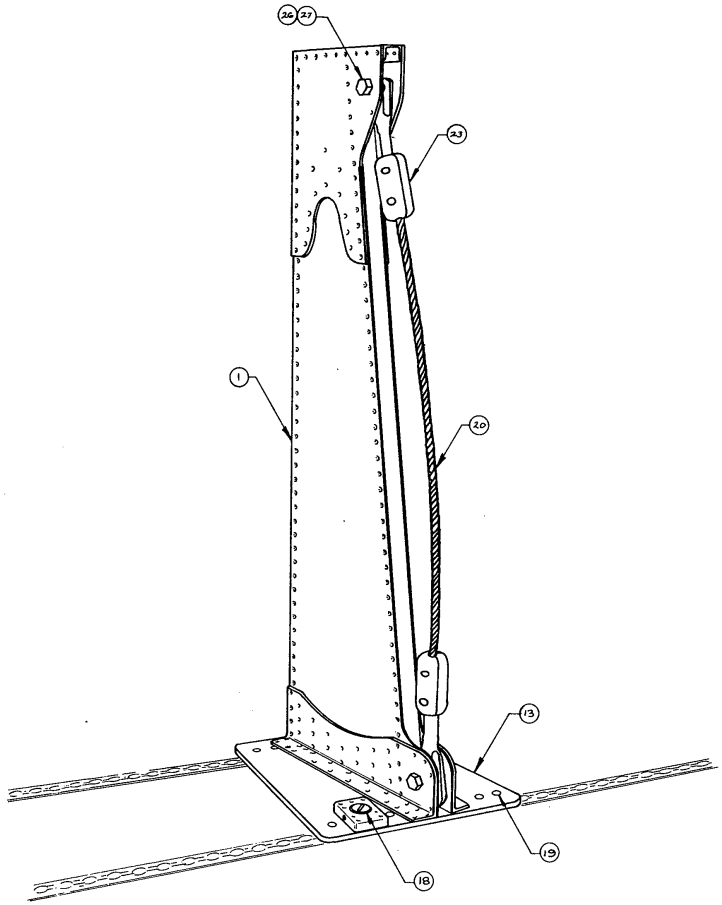

This is a REDUCED PRINT

MATERIALS LIST

NO	PART NAME	REQD	MATERIAL-DESCRIPTION	SHEET
1	UPRIGHT	1	PARTS 2-12	2 & 3
13	BASE	1	PARTS 14-17	4
18	STOP LOCK	1	PART 18	4
19	ROOT	16	PART 19	4
20	CABLE ASSY	1	PARTS 21-22	2
23	STOP	2	PARTS 24-25	4
26	BOLT	2	AN8-22A	
27	NUT	2	MS20365-820	

NOTES:

1. ALL RIVETING SHALL COMPLY WITH FAA PUBLICATION EA-AC 43.13-1A & 2A LATEST REVISION CHAPTER 2 SECTION 3.
2. THE CABLE AND ENDS ARE TO BE SWAGED IN ACCORDANCE WITH FAA PUBLICATION EA-AC 43.13-1A & 2A LATEST REVISION CHAPTER 4, SECTION 1.

STC NO.

WEIGHT 14.8 lb

UNLESS OTHERWISE SPECIFIED
TOLERANCES:
FRACTIONS ± —
DECIMALS ± —
ANGLES ± —
DIMENSIONS ARE IN INCHES
BREAK SHARP EDGES

DRAWN LASSILA
DESIGNED LASSILA
CHECKED DP & DK
APPROVED DP
SCALE NONE
DATE MAY 1987

DATE	REVISION	BY

U.S. DEPT. OF AGRICULTURE
FOREST SERVICE
EQUIPMENT DEVELOPMENT CENTER
MISSOULA, MONTANA

TITLE
CESSNA 208
VERTICAL ANCHOR

SHEET 1 OF 4

MEDC-804

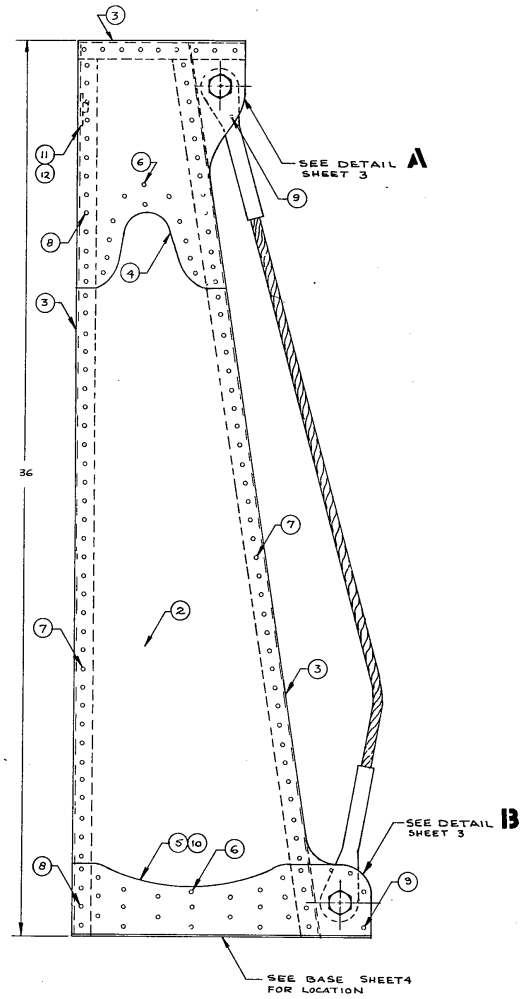

① UPRIGHT

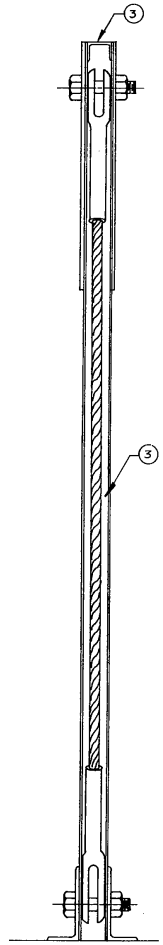

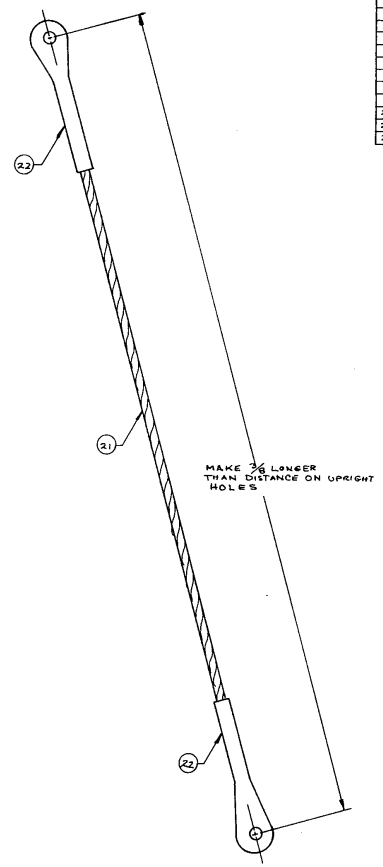

⑳ CABLE ASSY

MATERIALS LIST

NO	PART NAME	REQD	MATERIAL-DESCRIPTION	SHEET
1	UPRIGHT	1	PARTS 2-12	
2	SIDES	2	.063 THICK 2024-T3 ALUM ALLOY SHEET	
3	CHANNEL	3	AND 10187-1007 2024-T3511 ALUM ALLOY	
4	UPPER REINF	2	.125 THICK 2024-T3 ALUM ALLOY SHEET	
5	BOTTOM ANGLE	2	3 X 1¼ X ⅛ 2024-T3511 ALUM ALLOY ANGLE	
			TIERNAY METALS SECT. NO. 60-8069 OR EQ	
6	RIVET	60	MS 20470 AD4-6	
7	RIVET	124	CHEERY MAY CR3243-4-3	
8	RIVET	86	CHEERY MAY CR3243-4-5	
9	RIVET	10	MS 20426 AD4-6	
10	RIVET	44	MS 20470 AD4-9	
11	T-NUT	1	MS 21078-4 OR NAS1023N4	
12	RIVET	2	MS 20426 AD3-5	
20	CABLE ASSY	1	PARTS 21-22	
21	CABLE	1	⅜ DIA 7X19 GALV AIRCRAFT CABLE	
22	FORK END	2	MS 20667-12	

This is a REDUCED PRINT

UNLESS OTHERWISE SPECIFIED TOLERANCES: FRACTIONS ± 1/32 DECIMALS ± .005 ANGLES ± 1° DIMENSIONS ARE IN INCHES BREAK SHARP EDGES	DATE	REVISION	BY
	U.S. DEPT. OF AGRICULTURE FOREST SERVICE EQUIPMENT DEVELOPMENT CENTER MISSOULA, MONTANA		
DRAWN LASSILA DESIGNED LASSILA CHECKED DP & DK APPROVED DP SCALE HALF DATE OCT 1986	TITLE CESSNA 208 VERTICAL ANCHOR		
	SHEET 2 OF 4	MEDC-804	

MATERIALS LIST				
NO	PART NAME	REQD	MATERIAL-DESCRIPTION	SHEET

PARTS ON SHEET 2

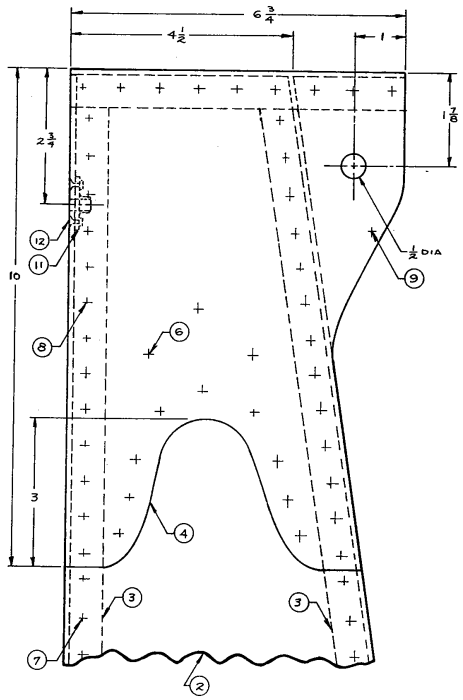

DETAIL A

USE AS PATTERN FOR UPPER REINFORCEMENT AND RIVET PATTERN.

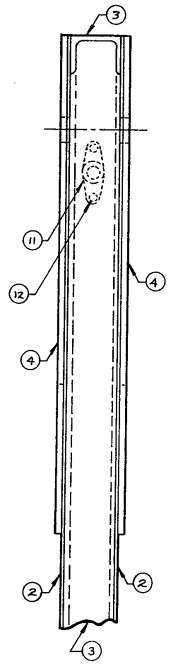

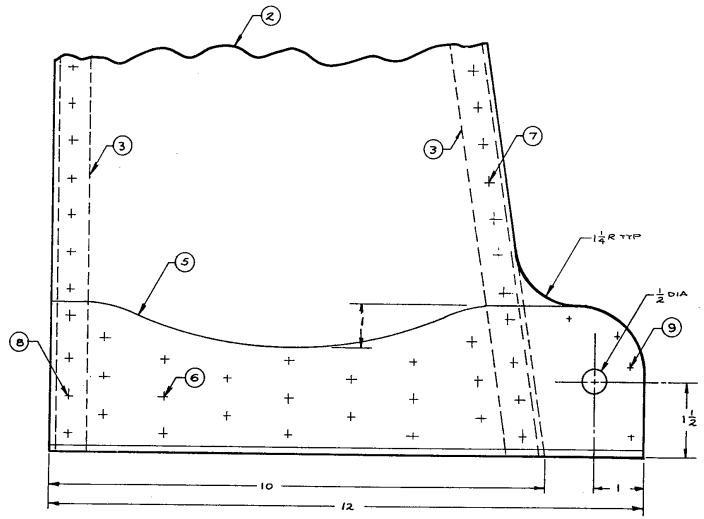

DETAIL B

USE AS PATTERN FOR BOTTOM ANGLE AND RIVET PATTERN.

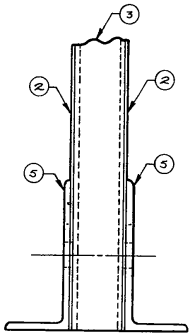

This is a REDUCED PRINT

UNLESS OTHERWISE SPECIFIED
TOLERANCES:
FRACTIONS ± 1/32
DECIMALS ± .005
ANGLES ± 1°
DIMENSIONS ARE IN INCHES
BREAK SHARP EDGES

DATE	REVISION	BY

U.S. DEPT. OF AGRICULTURE
FOREST SERVICE
EQUIPMENT DEVELOPMENT CENTER
MISSOULA, MONTANA

DRAWN LASSILA
DESIGNED LASSILA
CHECKED DP & DK
APPROVED DP
SCALE FULL
DATE OCT 1986

TITLE
CESSNA 208
VERTICAL ANCHOR

SHEET 3 OF 4

MEDC-804

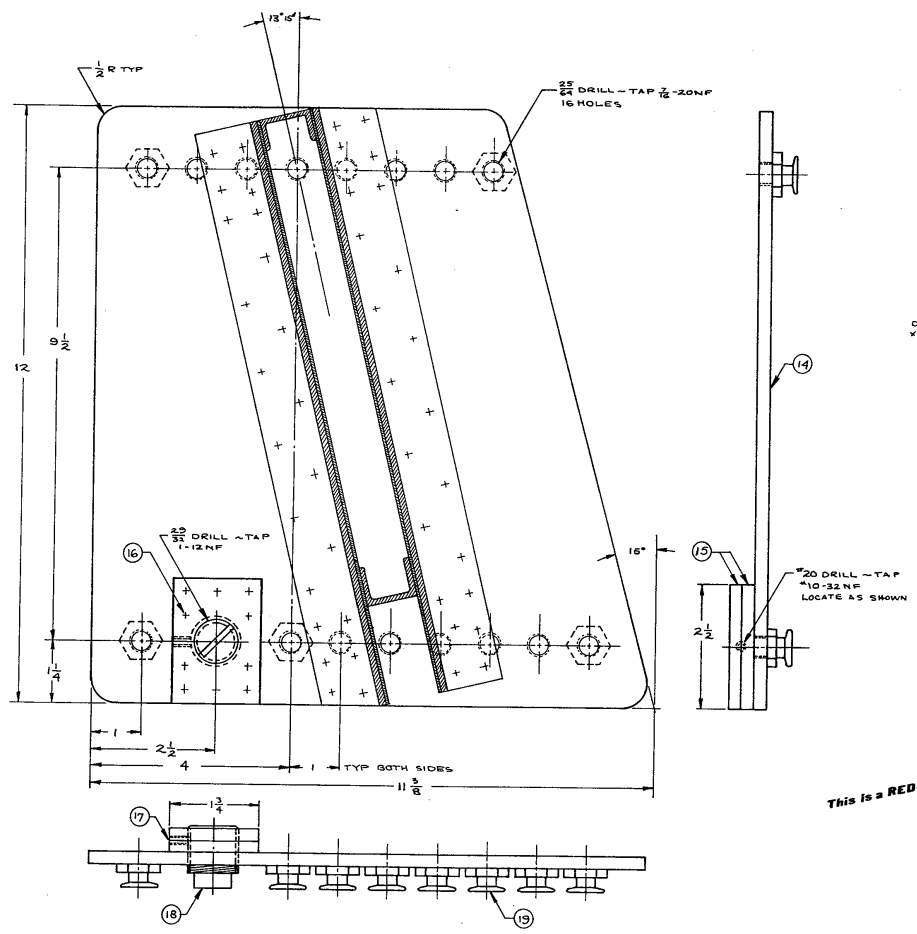

⑬ BASE

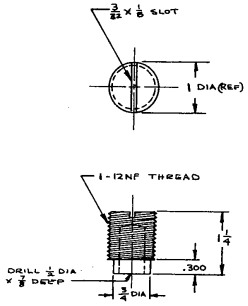

⑱ STOP LOCK

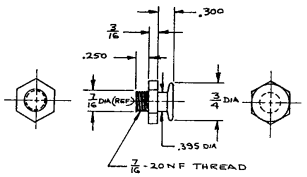

⑲ FOOT

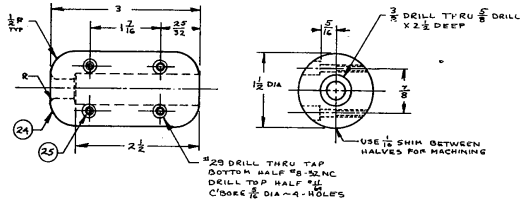

㉓ STOP

This is a REDUCED PRINT

MATERIALS LIST

NO	PART NAME	REQD	MATERIAL-DESCRIPTION	SHEET
13	BASE	1	PARTS 14-17	
14	BASE PLATE	1	1/4 THICK 7075-T6 ALUM ALLOY	
15	PAD	2	1/4 X 1 3/4 X 2 1/2 7075-T6 ALUM ALLOY	
16	RIVET	10	MS 20426 AD4-16	
17	SET SCREW	1	#10-32NF SET SCREW	
18	STOP LOCK	1	1 DIA STEEL ROUND	
19	FOOT	16	3/4 HEX RYCUT 49 (41L40) ANNEALED STEEL	
23	STOP	2	PARTS 24-25	
24	BODY	2	1 1/2 DIA ALUM ROUND	
25	SCREWS	8	#8-32NC X 3/4 LG SOCKET HD CAP SCREW	

UNLESS OTHERWISE SPECIFIED
TOLERANCES:
FRACTIONS ± 1/32
DECIMALS ± .005
ANGLES ± 1°
DIMENSIONS ARE IN INCHES
BREAK SHARP EDGES

DATE	REVISION	BY

U.S. DEPT. OF AGRICULTURE
FOREST SERVICE
EQUIPMENT DEVELOPMENT CENTER
MISSOULA, MONTANA

DRAWN LASSILA
DESIGNED LASSILA
CHECKED DP & DK
APPROVED DP
SCALE FULL
DATE OCT 1986

TITLE
CESSNA 208 VERTICAL ANCHOR

SHEET 4 OF 4 | MEDC-804

MATERIALS LIST

NO	PART NAME	REQD	MATERIAL-DESCRIPTION	SHEET
1	BODY	1	1 3/8 x .313 WALL ALUMINUM TUBE	
2	OUTSIDE AT PLATE-FWD	1	1/2 ALUMINUM PLATE 6061-T6	
3	OUTSIDE AT PLATE-AFT	1	" " " " "	
4	INSIDE LOCK RING	1	" " " " "	
5	OUTSIDE LOCK RING	1	" " " " "	
6	STEM	1	3/8 ROUND COLD ROLLED STEEL 1018	
7	BEARING	1	OILITE FLANGE BEARING .5051D x .7630D x 3/8 # FF723	
8	WASHER	1	15/32 ID x 1 OD HARDENED STEEL WASHER, MASTER-CHEM # 08029A032	
9	PIN	1	3/16 HARDENED STEEL DOWL PIN 7/8 LONG, MASTER-CHEM # 08281A509	
10	TOOL	1	PARTS 11-13	
11	BODY	1	1 1/2 SCH 40 BLACK PIPE	
12	HANDLE	1	1/4 STRIP STEEL	
13	PINS	1	1/8 ROUND STEEL	

OUTSIDE ATTACHMENT PLATES BOTH FWD AND AFT MUST BE FINAL FITTED AT ASSEMBLY IN AIRCRAFT THEN BLIND RIVITED TO AIRCRAFT STRUCTURE

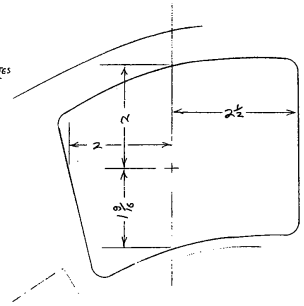

OUTSIDE ATTACHMENT PLATE PATTERN
2 REQ'D - ONE FWD / ONE AFT

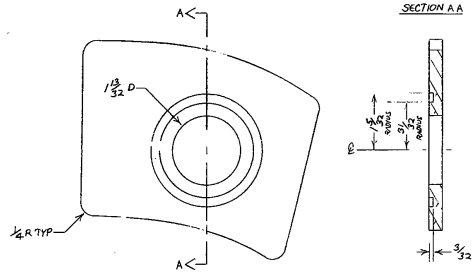

(2) OUTSIDE ATTACHMENT PLATE - FWD
FULL SIZE

SECTION A A

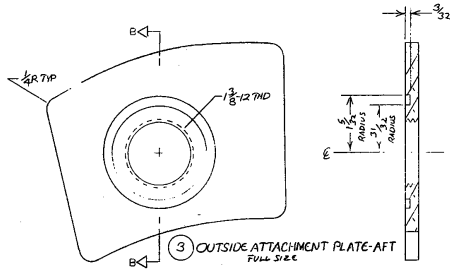

(3) OUTSIDE ATTACHMENT PLATE-AFT
FULL SIZE

SECTION BB

INSTALLATION DETAIL
FULL SCALE

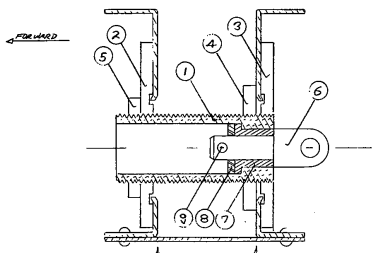

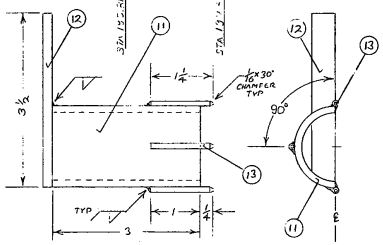

(10) TOOL

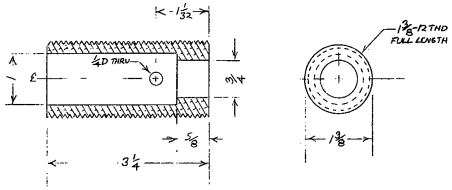

(1) BODY
FULL SIZE

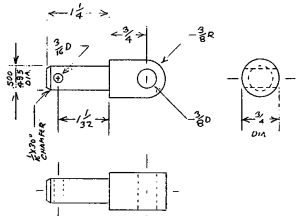

(6) STEM
FULL SCALE

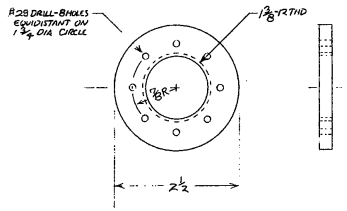

(4) INSIDE LOCK RING
FULL SIZE

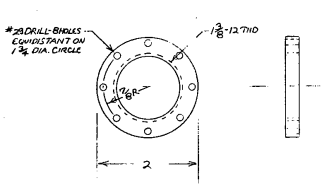

(5) OUTSIDE LOCK RING
FULL SIZE

This is a REDUCED PRINT

UNLESS OTHERWISE SPECIFIED	DATE	REVISION	BY
TOLERANCES: FRACTIONS ± ___ DECIMALS ± ___ ANGLES ± ___ DIMENSIONS ARE IN INCHES BREAK SHARP EDGES	U.S. DEPT. OF AGRICULTURE FOREST SERVICE EQUIPMENT DEVELOPMENT CENTER MISSOULA, MONTANA		
DRAWN W KILROY	TITLE CESSNA 208 CARAVAN HORIZONTAL ANCHOR CABLE FORWARD ATTACHMENT POINT		
DESIGNED W KILROY			
CHECKED			
APPROVED			
SCALE NOTED			
DATE 10/86	SHEET 1 OF 2	MEDC-808	

MATERIALS LIST

NO	PART NAME	REQ'D	MATERIAL-DESCRIPTION	SHEET
14	PLATE	1	3/16 ALUMINUM PLATE 6061-T6	
15	STIFFENER	1	1 X 1 X 3/16 ALUMINUM ANGLE - SHARP ANGLE 6063-T6	
16	STEM	1	3/4 ROUND COLD ROLLED STEEL, 1018	
17	PIN	1	3/8 HARDENED GROUND STEEL DOWEL PIN "SELLING PATENT" CARR # 9838A1A509	
18	WASHER	1	5/10 X 1 1/8 OD X .125 THK HARDENED STEEL FINISHED WASHER - HEMATEK - CARR # 880298A033	
19	BUSHING	1	1" ROUND COLD ROLLED STEEL, 1018	
20	BEARING	1	ONLITE FLANGE BEARING .505 ID X .763 OD X 5/8 # FF723	
21	SPACER PLATE	1	1 X 6 X 5/16 THK ALUMINUM PLATE 6061-T6	

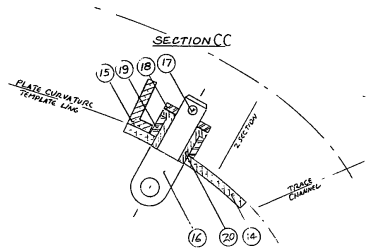

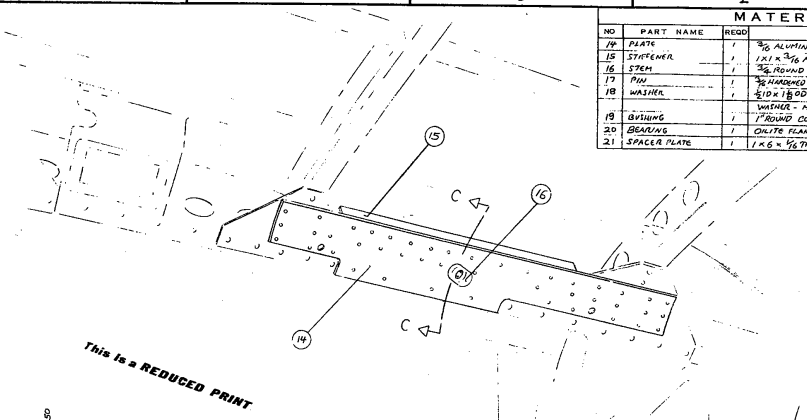

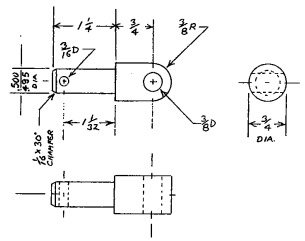

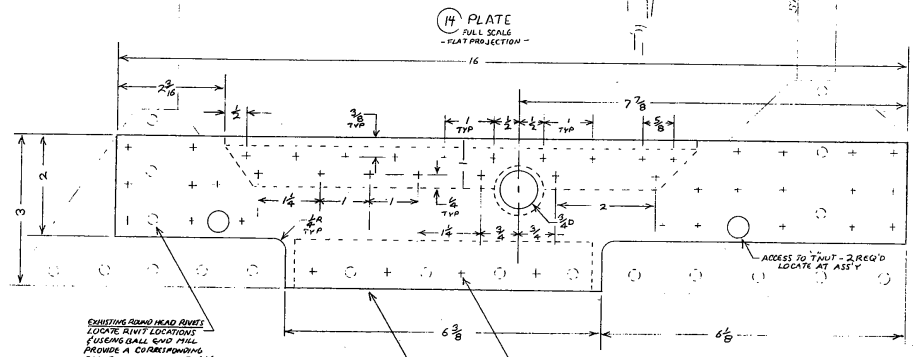

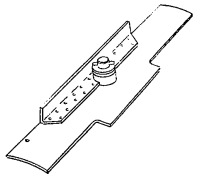

UNDERSIDE ASSEMBLY DETAIL

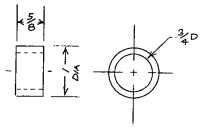

19 BUSHING
FULL SCALE

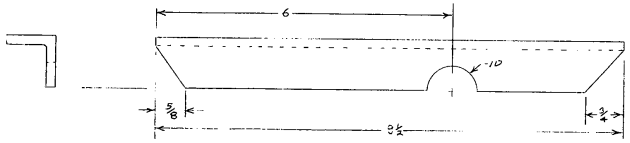

15 STIFFENER
FULL SCALE

UNLESS OTHERWISE SPECIFIED	DATE	REVISION	BY
TOLERANCES: FRACTIONS ± ___ DECIMALS ± ___ ANGLES ± ___ DIMENSIONS ARE IN INCHES BREAK SHARP EDGES	U.S. DEPT. OF AGRICULTURE FOREST SERVICE EQUIPMENT DEVELOPMENT CENTER MISSOULA, MONTANA		
DRAWN W KILROY	TITLE CESSNA 208 CARAVAN HORIZONTAL ANCHOR CABLE AFT ATTACHMENT POINT		
DESIGNED W KILROY			
CHECKED			
APPROVED			
SCALE 1:2 FULL			
DATE 1 0186	SHEET 2 OF 2	MEDC-808	

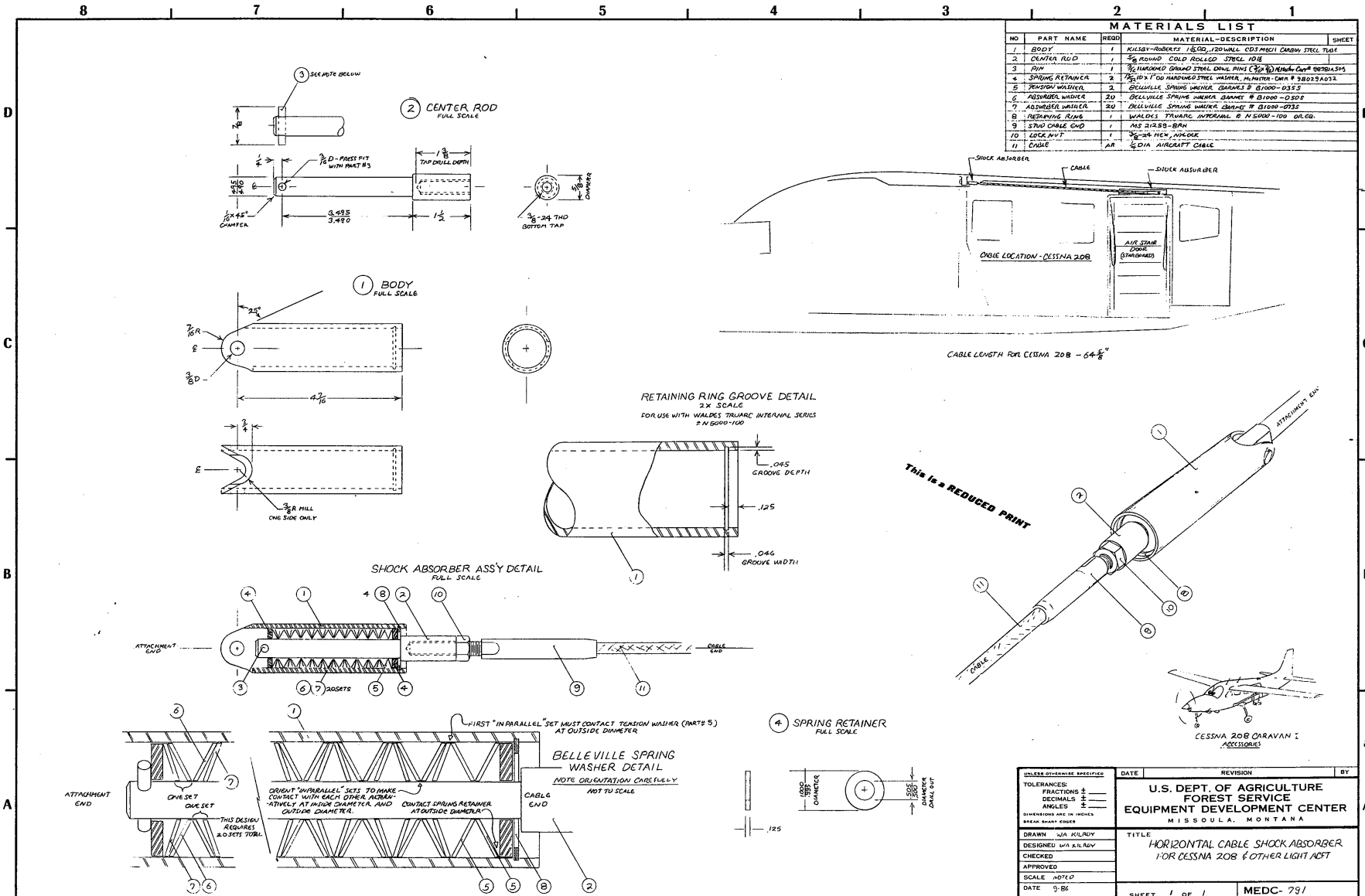

MATERIALS LIST
NO | PART NAME | REQD | MATERIAL-DESCRIPTION | SHEET
1 | BODY | 1 | KILSBY-ROBERTS 1 1/8 OD, .120 WALL CDS MECH CARBON STEEL TUBE
2 | CENTER ROD | 1 | 5/8 ROUND COLD ROLLED STEEL 1018
3 | PIN | 1 | 3/16 HARDENED GROUND STEEL DOWL PINS (3/16 x 3/4) Retainer Cart # 98381A505
4 | SPRING RETAINER | 2 | 1 3/32 ID x 1" OD HARDENED STEEL WASHER, McMASTER-CARR # 98029A032
5 | TENSION WASHER | 2 | BELLVILLE SPRING WASHER BARNES # B1000-0355
6 | ABSORBER WASHER | 20 | BELLVILLE SPRING WASHER BARNES # B1000-0505
7 | ABSORBER WASHER | 20 | BELLVILLE SPRING WASHER BARNES # B1000-0735
8 | RETAINING RING | 1 | WALDES TRUARC INTERNAL # N5000-100 OR EQ.
9 | STUD CABLE END | 1 | MS 21259-8RH
10 | LOCK NUT | 1 | 3/8-24 HEX, NYLOCK
11 | CABLE | AR | 1/4 DIA AIRCRAFT CABLE
3 SEE NOTE BELOW
2 CENTER ROD
FULL SCALE
3/16 D - PRESS FIT WITH PART #3
1 3/8 TAP DRILL DEPTH
1/16 x 45° CHAMFER
3.495
3.490
1 1/2
3/8-24 THD BOTTOM TAP
5/8 DIAMETER
1 BODY
FULL SCALE
25°
7/16 R
3/8 D
4 7/16
3/8 R MILL ONE SIDE ONLY
RETAINING RING GROOVE DETAIL
2X SCALE
FOR USE WITH WALDES TRUARC INTERNAL SERIES # N5000-100
.045 GROOVE DEPTH
.125
.046 GROOVE WIDTH
SHOCK ABSORBER
CABLE
SHOCK ABSORBER
CABLE LOCATION - CESSNA 208
AIR STAIR DOOR (STARBOARD)
CABLE LENGTH FOR CESSNA 208 - 64 5/8"
This is a REDUCED PRINT
ATTACHMENT END
CABLE
CESSNA 208 CARAVAN I
ACCESSORIES
SHOCK ABSORBER ASS'Y DETAIL
FULL SCALE
ATTACHMENT END
CABLE END
20 SETS
FIRST "IN PARALLEL" SET MUST CONTACT TENSION WASHER (PART # 5) AT OUTSIDE DIAMETER
BELLEVILLE SPRING WASHER DETAIL
NOTE ORIENTATION CAREFULLY
NOT TO SCALE
ATTACHMENT END
ONE SET
ONE SET
THIS DESIGN REQUIRES 20 SETS TOTAL
ORIENT "IN PARALLEL" SETS TO MAKE CONTACT WITH EACH OTHER ALTERNATIVELY AT INSIDE DIAMETER AND OUTSIDE DIAMETER.
CONTACT SPRING RETAINER AT OUTSIDE DIAMETER
CABLE END
4 SPRING RETAINER
FULL SCALE
.125
1.000 .995 DIAMETER
.505 .500 DIAMETER DRILL OUT
UNLESS OTHERWISE SPECIFIED
TOLERANCES:
FRACTIONS ±
DECIMALS ±
ANGLES ±
DIMENSIONS ARE IN INCHES
BREAK SHARP EDGES
DATE
REVISION
BY
U.S. DEPT. OF AGRICULTURE
FOREST SERVICE
EQUIPMENT DEVELOPMENT CENTER
MISSOULA, MONTANA
DRAWN WA KILROY
DESIGNED WA KILROY
CHECKED
APPROVED
SCALE NOTED
DATE 9-86
TITLE
HORIZONTAL CABLE SHOCK ABSORBER
FOR CESSNA 208 & OTHER LIGHT ACFT
SHEET 1 OF 1
MEDC- 791

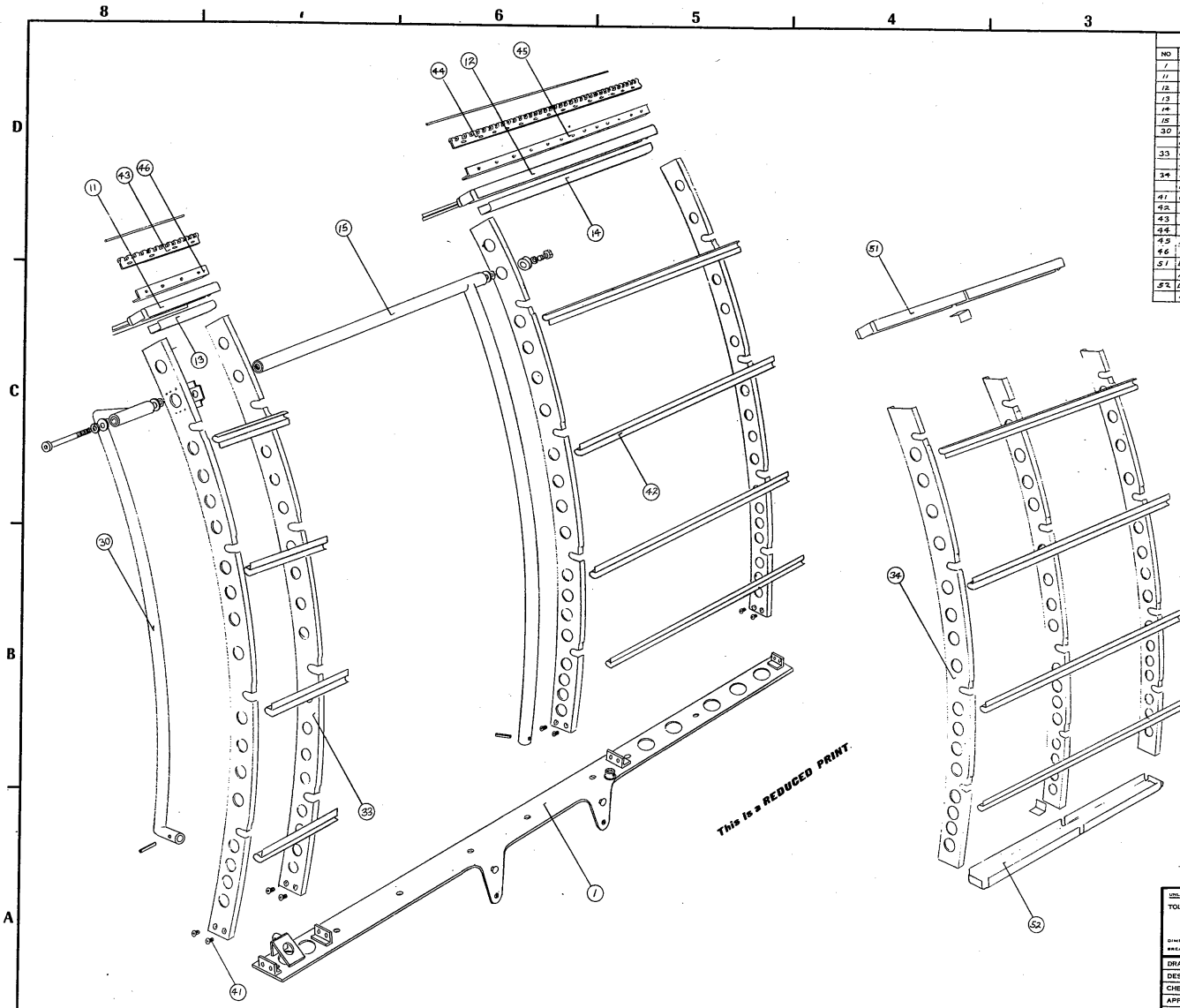

MATERIALS LIST

NO	PART NAME	REQD	MATERIAL-DESCRIPTION	SHEET
1	THRESHOLD ASS'Y	1	PARTS 2 THRU 10	2
11	TOP FRAME FWD	1	PART 11	3
12	TOP FRAME AFT	1	PART 12	3
13	FRAME STIFFENER FWD	1	PART 13	3
14	FRAME STIFFENER AFT	1	PART 14	3
15	HAND RAIL ASS'Y	1	PARTS 16 THRU 29	4
30	INSIDE HANDRAIL			
	GATE ASS'Y	1	PARTS 31 THRU 32	5
33	STATIONARY			
	STRUCTURE BULKHEAD	4	PART 33	6
34	REMOVABLE DOOR			
	BULKHEAD	3	PART 34	6
41	CAP SCREW	8	PART 41	6
42	STRINGERS	12	PART 42	6
43	HINGE-FWD	1	PART 43	6
44	HINGE-AFT	1	PART 44	6
45	AFT ANGLE PLATE	1	PART 45	7
46	FWD ANGLE PLATE	1	PART 46	7
51	DOOR TOP FRAME			
	ASSEMBLY	1	PART 51	8
52	DOOR BASE FRAME			
	ASSEMBLY	1	PART 52	8

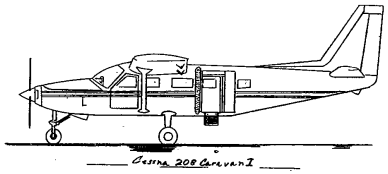

Cessna 208 Caravan I

UNLESS OTHERWISE SPECIFIED	DATE	REVISION	BY
TOLERANCES: FRACTIONS ± ___ DECIMALS ± ___ ANGLES ± ___ DIMENSIONS ARE IN INCHES BREAK SHARP EDGES	U.S. DEPT. OF AGRICULTURE FOREST SERVICE EQUIPMENT DEVELOPMENT CENTER MISSOULA, MONTANA		
DRAWN W KILROY	TITLE		
DESIGNED W KILROY	CESSNA 208 CARAVAN SMOKE JUMPER DOOR		
CHECKED			
APPROVED			
SCALE NOTED			
DATE 1/86	SHEET 1 OF 14	MEDC-792	

9	RIVET	8	1/8 x 3/16 FLAT HD MS 20426AD4-7
10	RIVET	20	3/32 x 3/16 FLAT HD MS 20426AD3-5

MATERIALS LIST

NO	PART NAME	REQ'D	MATERIAL-DESCRIPTION	SHEET
1	THRESHOLD ASS'Y	1	PARTS 2 THRU 10	
2	THRESHOLD	1	1/8 PLATE STEEL 1018	
3	ANGLE PLATE	4	1 1/2 x 3/4 x 1/8 ALUMINUM ANGLE 6063 T52 (SHARP CORNER)	
4	HANDRAIL BASE	2	1 1/8 DIA. COLD FINISHED 1018 STEEL	
5	HANDRAIL PIN	2	3/16 x 1 1/4 STEEL ROLL PIN	
6	LUG	2	3/4 DIA. COLD FINISHED 1018 STEEL	
7	NUT	2	MS21080-4 OVE LUG ANCHOR NUT	
8	NUT	8	MS21080-3 OVE LUG ANCHOR NUT	

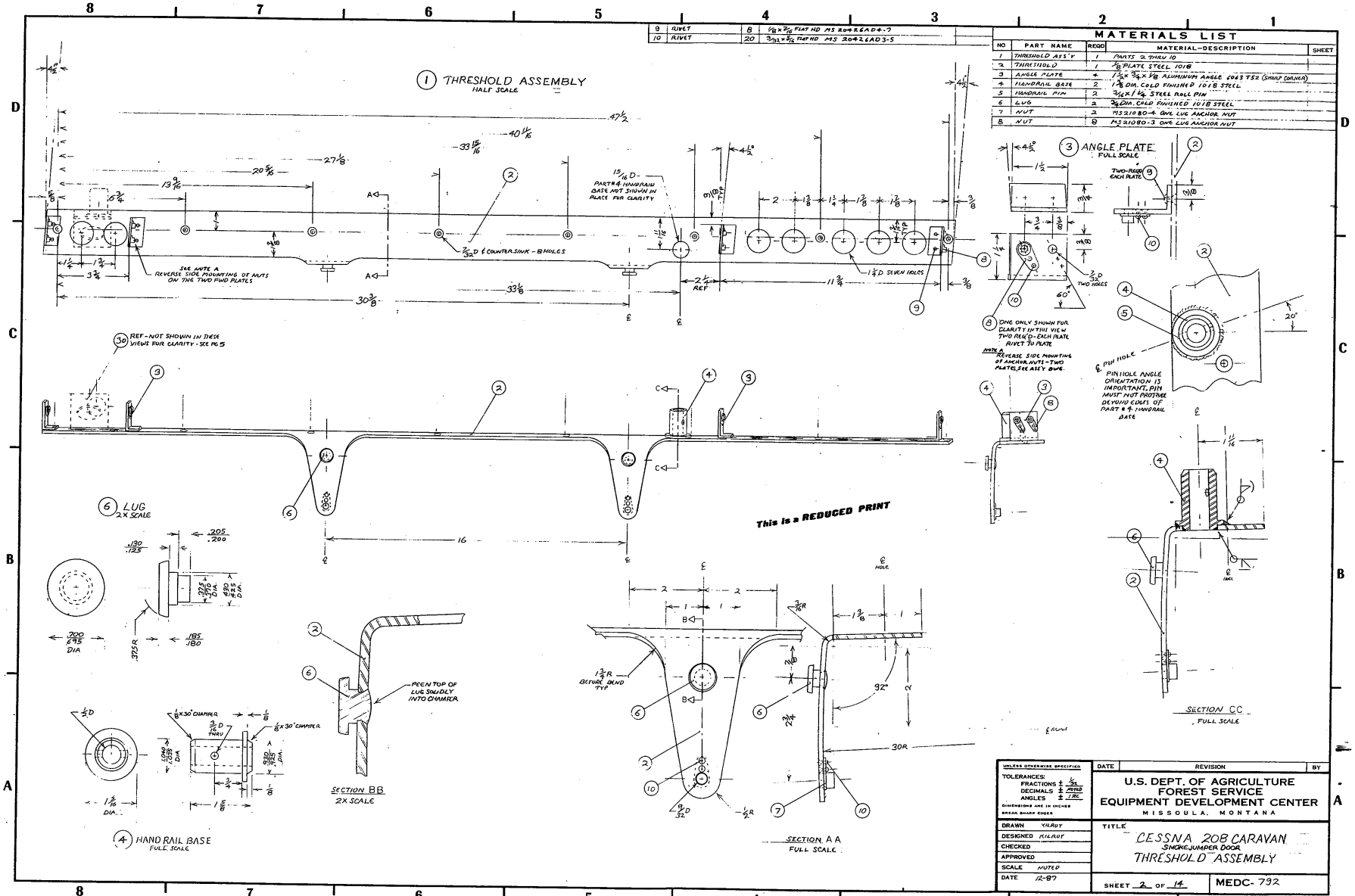

UNLESS OTHERWISE SPECIFIED	DATE	REVISION	BY
TOLERANCES: FRACTIONS ± 1/64, DECIMALS ± .005, ANGLES ± 1/2° DIMENSIONS ARE IN INCHES BREAK SHARP EDGES			

U.S. DEPT. OF AGRICULTURE
FOREST SERVICE
EQUIPMENT DEVELOPMENT CENTER
MISSOULA, MONTANA

DRAWN	KILROY
DESIGNED	KILROY
CHECKED	
APPROVED	
SCALE	NOTED
DATE	12-87

TITLE
CESSNA 208 CARAVAN
SMOKEJUMPER DOOR
THRESHOLD ASSEMBLY

SHEET 2 OF 14

MEDC-792

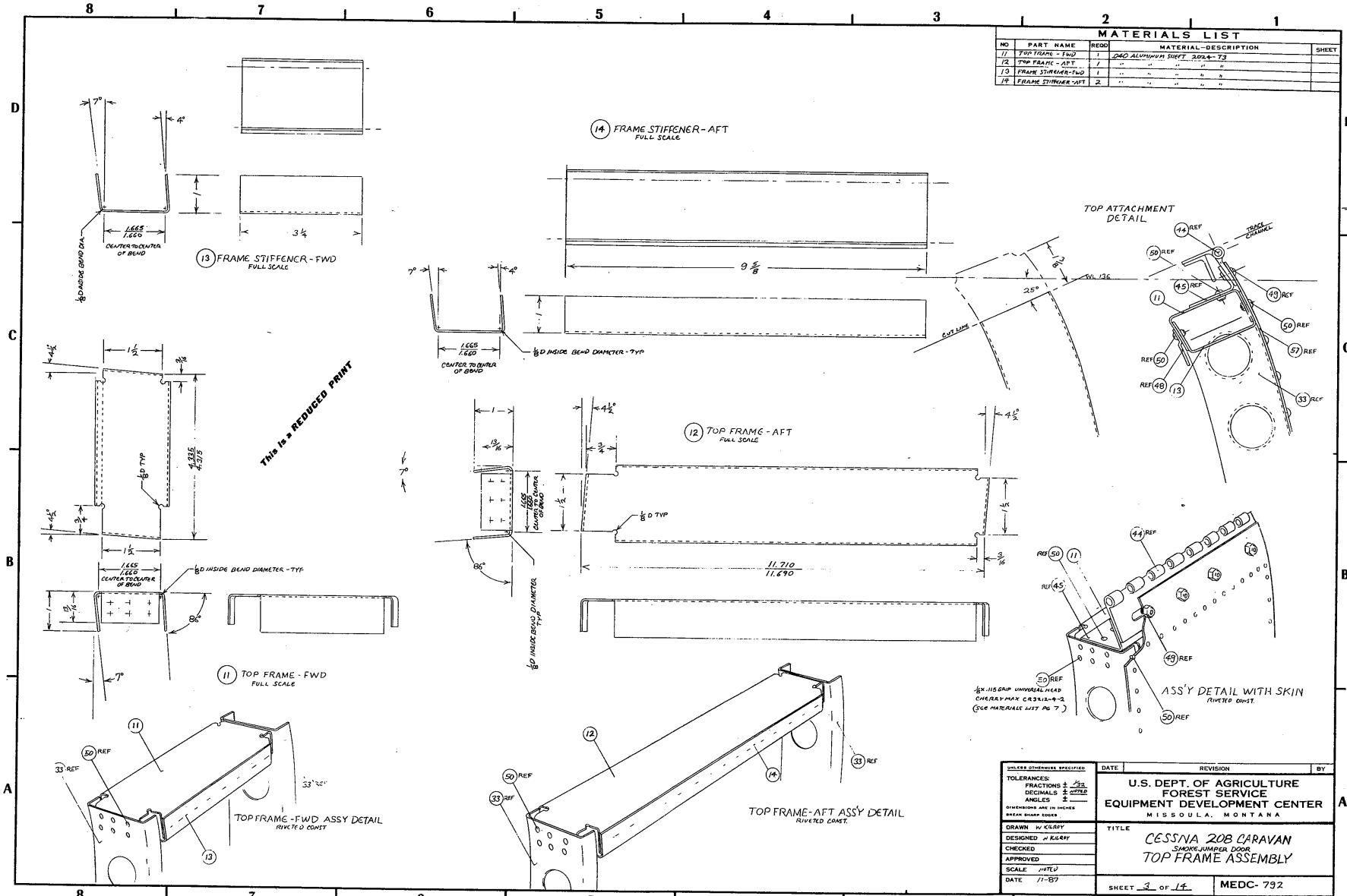

MATERIALS LIST
NO | PART NAME | REQD | MATERIAL-DESCRIPTION | SHEET
11 | TOP FRAME - FWD | 1 | .040 ALUMINUM SHEET 2024-T3
12 | TOP FRAME - AFT | 1 | " " " " "
13 | FRAME STIFFENER-FWD | 1 | " " " " "
14 | FRAME STIFFENER-AFT | 2 | " " " " "
(14) FRAME STIFFENER-AFT
FULL SCALE
(13) FRAME STIFFENER-FWD
FULL SCALE
(12) TOP FRAME-AFT
FULL SCALE
(11) TOP FRAME-FWD
FULL SCALE
TOP ATTACHMENT DETAIL
ASS'Y DETAIL WITH SKIN
RIVETED CONST.
TOP FRAME-FWD ASSY DETAIL
RIVETED CONST
TOP FRAME-AFT ASS'Y DETAIL
RIVETED CONST.
This is a REDUCED PRINT
CENTER TO CENTER OF BEND
1/8 D INSIDE BEND DIAMETER - TYP
1/8 D TYP
1/8 D INSIDE BEND DIAMETER TYP
1/8 X .115 GRIP UNIVERSAL HEAD CHERRY MAX CR3212-4-2 (SEE MATERIALS LIST PG 7)
UNLESS OTHERWISE SPECIFIED
TOLERANCES:
FRACTIONS ± 1/32
DECIMALS ± NOTED
ANGLES ±
DIMENSIONS ARE IN INCHES
BREAK SHARP EDGES
DRAWN W KILROY
DESIGNED W KILROY
CHECKED
APPROVED
SCALE NOTED
DATE 11-87
DATE | REVISION | BY
U.S. DEPT. OF AGRICULTURE
FOREST SERVICE
EQUIPMENT DEVELOPMENT CENTER
MISSOULA, MONTANA
TITLE
CESSNA 208 CARAVAN
SMOKEJUMPER DOOR
TOP FRAME ASSEMBLY
SHEET 3 OF 14
MEDC- 792

MATERIALS LIST

NO	PART NAME	REQD	MATERIAL-DESCRIPTION	SHEET
15	HANDRAIL ASS'Y	1	PARTS 16 TO 29	
16	HORIZONTAL HANDRAIL	1	SCHEDULE 40 - 1" ALUMINUM PIPE 6061-T6	
17	HANDRAIL SPACER	1	" " " " " "	
18	OUTSIDE VERTICAL HANDRAIL	1	" " " " " "	
19	INSIDE VERTICAL HANDRAIL	1	" " " " " "	
20	POSITIONING SLEEVE	2	1 1/2 ROUND ALUMINUM 6061-T6	
21	THREADED SLEEVE	2	" " " " " "	
22	ANGLE BUSHING	1	" " " " " "	
23	BRACKET	1	.040 THK ALUMINUM SHEET 2024-T3 BARE	
24	WASHER	3	1/2 BOLT SIZE 1 1/2 OD, 1/16 THK MCMASTER CARR # 91030A114 OR EQUAL	
25	WASHER	2	1/2 BOLT SIZE .995 OD, #301 STEEL WAVE WASHER, MCMASTER CARR # 92161A033 OR EQUAL	
26	WASHER	2	1/2 BOLT SIZE, 1 1/16 OD, 3/32 THK STEEL, MCMASTER CARR # 90126A031 OR EQUAL.	
27	BOLT	1	1/2-20 x 5 LONG SOCKET HEAD CAP SCREW W/LOCK WASHER	
28	BOLT	1	1/2-20 x 1 1/2 LONG SOCKET HEAD CAP SCREW W/LOCK WASHER	
29	PIN	2	3/16 x 1 3/4 STAINLESS STEEL EXPANSION PINS, MCMASTER CARR # 92383A361	

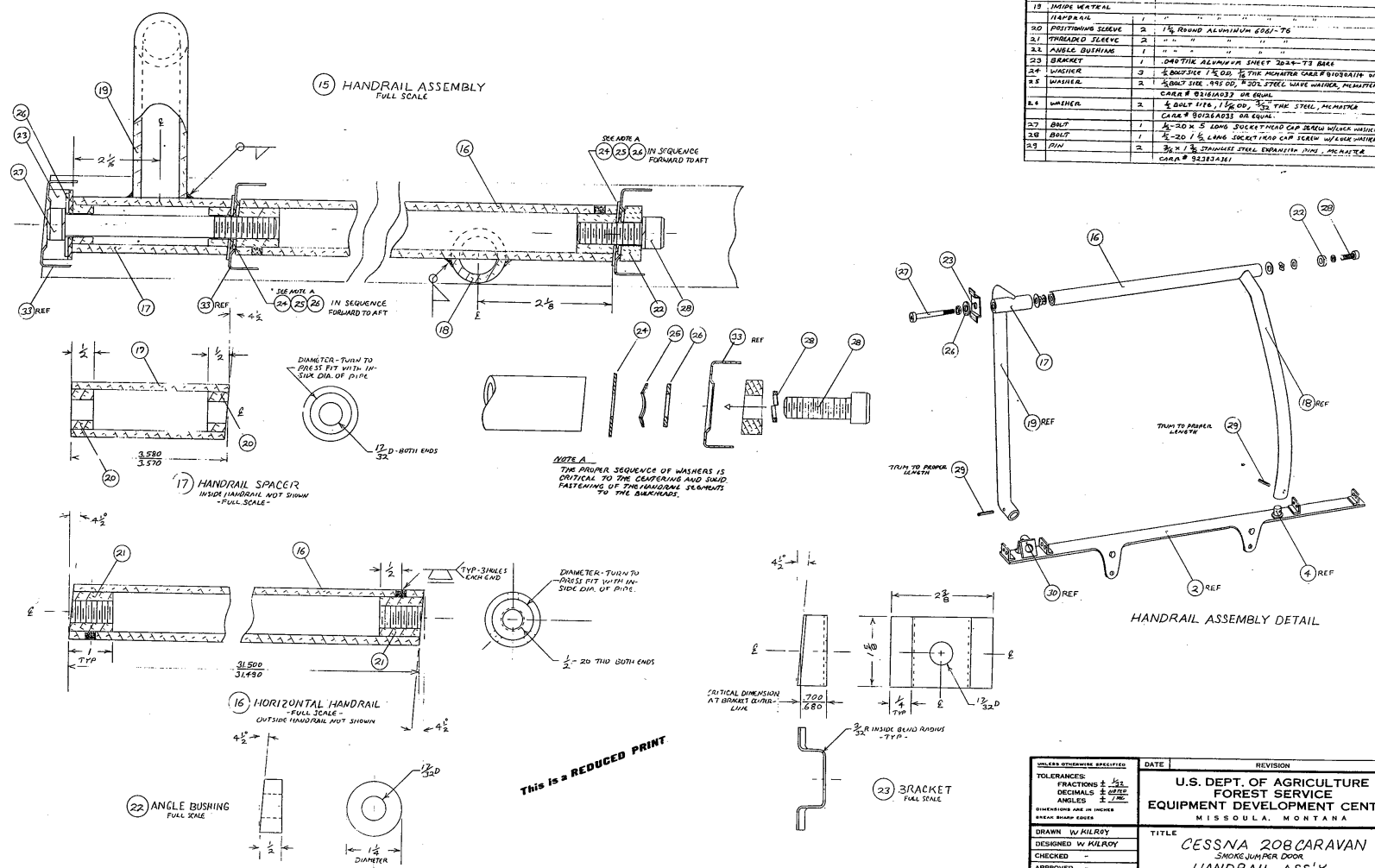

This is a REDUCED PRINT

UNLESS OTHERWISE SPECIFIED	DATE	REVISION	BY
TOLERANCES: FRACTIONS ± 1/32, DECIMALS ± .005, ANGLES ± 1/2°. DIMENSIONS ARE IN INCHES. BREAK SHARP EDGES	U.S. DEPT. OF AGRICULTURE FOREST SERVICE EQUIPMENT DEVELOPMENT CENTER MISSOULA, MONTANA		
DRAWN W KILROY	TITLE CESSNA 208 CARAVAN SMOKEJUMPER DOOR HANDRAIL ASS'Y		
DESIGNED W KILROY			
CHECKED -			
APPROVED -			
SCALE NOTED			
DATE 12-87	SHEET 4 OF 14	MEDC-792	

MATERIALS LIST				
NO	PART NAME	REQD	MATERIAL-DESCRIPTION	SHEET
20	INSIDE HANDRAIL			
	BASE ASSEMBLY	1	PLATE 31 THRU 32	
31	BASE PLATE	1	3 x 1/2 x 3/8 THK ANGLE, STEEL STRUCT	
32	GUSSET	1	3/8 PLATE STEEL, CRS	

This is a REDUCED PRINT

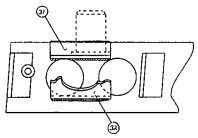

WELD LENGTH DETAIL

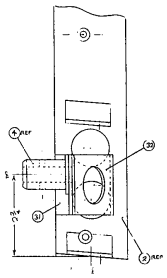

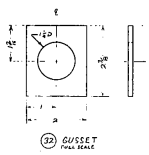

32 GUSSET
FULL SCALE

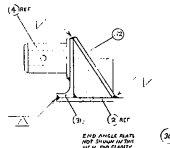

END ANGLE PLATE
NOT SHOWN ON THIS VIEW FOR CLARITY

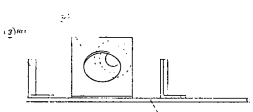

30 INSIDE HANDRAIL BASE ASSEMBLY
SHOWN ATTACHED TO PATTERN TO INDICATE ATTACHMENT

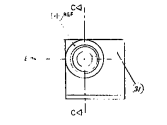

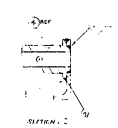

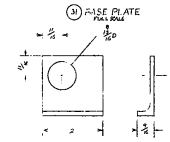

HANDRAIL BASE ATTACHMENT DETAIL

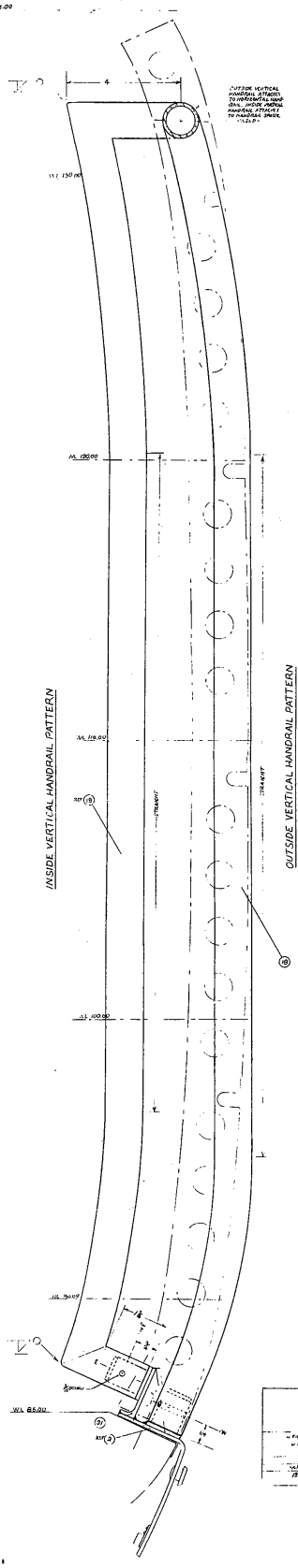

- MEDC -	
CESSNA 208 CARAVAN SHORE-LINER SERIES HAND RAIL	
15-09	1 of 1 14 #732

MATERIALS LIST				
NO	PART NAME	NO. OF	MATERIAL-DESCRIPTION	SHEET
37	BULKHEAD	2	CESSNA PART # 3617080-3	
37	BULKHEAD	3	" " "	
37	SIDE FLANGE GAGE BLOCK	1	4130 (2 Req'd)	
38	BLOCK	1	1x1 Square Tbul	
39	SIDE	5	3/4 Rd. Bar	
39	BOTTOM FLANGE GAGE BLOCK	1	4130 (2 Req'd)	
39	BLOCK	1	1x1 Square Tbul	
40	SIDE	3	3/4 Rd. Bar	
41	CAP SCREW		10-32 BUTTON HEAD SOCKET CAP SCREW	
42	[illegible]	7	[illegible]	
43	HINGE - FWD	1	CESSNA PART # 3617080-2	
44	HINGE - AFT	1	" " "	

TRIM TO A REDUCED PRINT

INSIDE BOTTOM ANCHOR NUT DETAIL
FULL SCALE

TOP FRAME DETAIL
FULL SCALE

THRESHOLD ATTACHMENT DETAIL
FULL SCALE

(36) INSIDE FLANGE GAGE BLOCK

(38) OUTSIDE FLANGE GAGE BLOCK

(34) REMOVABLE DOOR BULKHEAD

(37) STATIONARY STRUCTURE BULKHEAD

BULKHEAD MODIFICATION PATTERN

(44) HINGE - AFT

(43) HINGE - FWD

SECTION C-C

FLANGE BEND DETAIL
FULL SCALE

BULKHEAD SECTIONS (PART #'S) CESSNA PART #3617080-3) USED IN FABRICATION OF THE REMOVABLE DOOR ARE ALSO USED FROM THE FORWARD SIDE OF THE AIRCRAFT. TO BE USED IN THIS MOD. ON THE MOST SIDE, THE FLANGE ANGLES MUST BE REMOVED AS SHOWN ABOVE.

USE INSIDE FLANGE GAGE BLOCK* AND OUTSIDE FLANGE GAGE BLOCK* TO REVIT AND CHECK HOLES.

~ MEDC ~

CESSNA 208 CARAVAN
SHORT BARGE DOOR
BULKHEAD MODIFICATION DETAIL

DATE 6-87

#782

MATERIALS LIST

NO	PART NAME	REQD	MATERIAL-DESCRIPTION	SHEET
45	AFT ANGLE PLATE	1	.040 ALUMINUM 2024-T3	
46	FWD ANGLE PLATE	1	" " "	
47	TOP CLIP FWD	1	" " "	
48	TOP CLIP AFT	1	" " "	
49	CAP SCREW	14	10-24 X 1/2 BUTTON HEAD SOCKET CAP SCREW W/ FIBER LOCK LOCK NUT.	
50	RIVET	AR	1/8 X .120 GRIP UNIVERSAL HEAD CHERRYMAX CR3212-4-2	

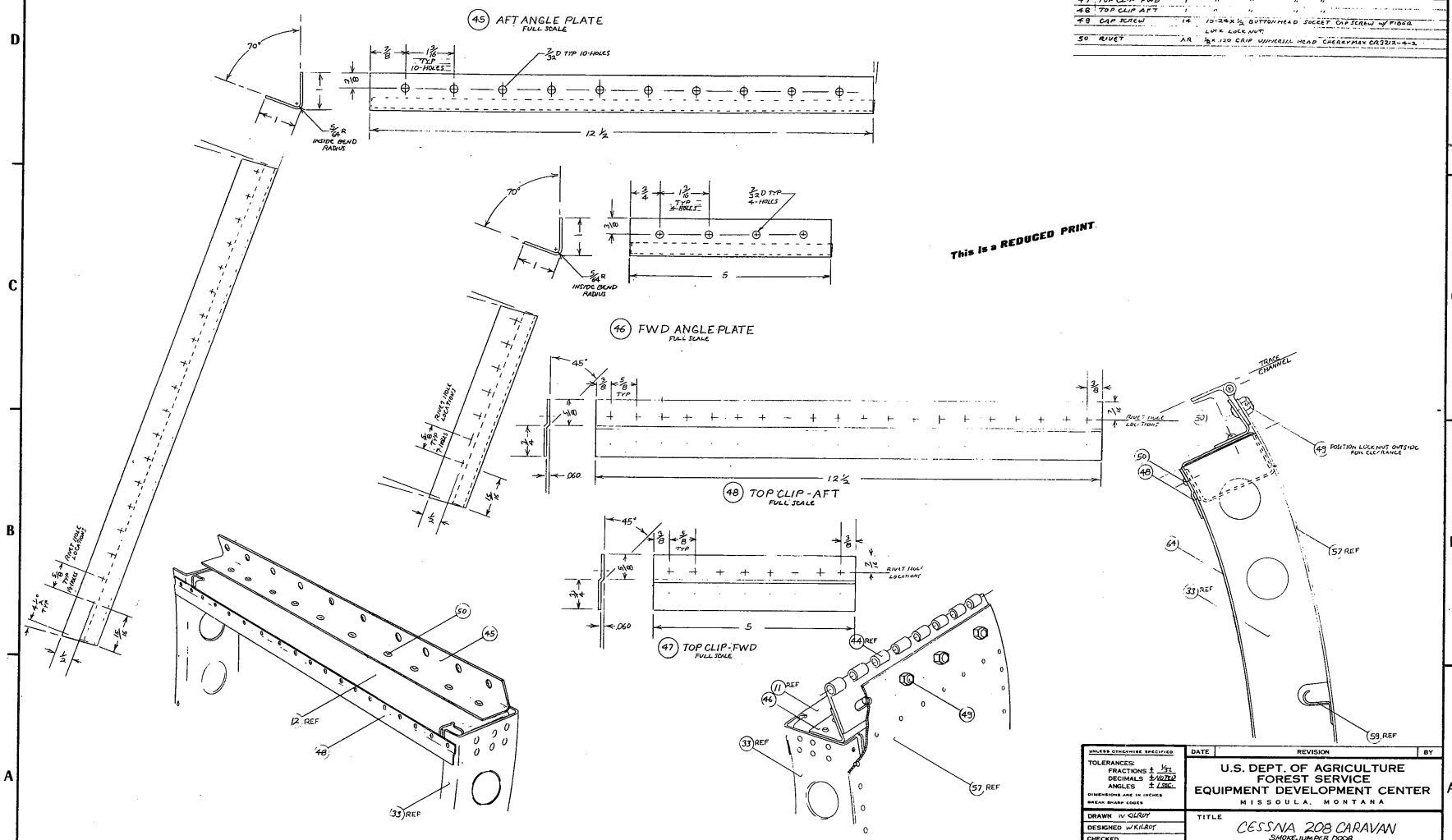

UNLESS OTHERWISE SPECIFIED	DATE	REVISION	BY
TOLERANCES: FRACTIONS ± 1/32 DECIMALS ±.010 ANGLES ± 1 DEG. DIMENSIONS ARE IN INCHES BREAK SHARP EDGES	U.S. DEPT. OF AGRICULTURE FOREST SERVICE EQUIPMENT DEVELOPMENT CENTER MISSOULA, MONTANA		
DRAWN W. KILROY	TITLE CESSNA 208 CARAVAN SMOKEJUMPER DOOR TOP ATTACHMENT DETAIL		
DESIGNED W. KILROY			
CHECKED			
APPROVED			
SCALE NOTED			
DATE 12-87	SHEET 7 OF 14	MEDC-792	

MATERIALS LIST				
NO	PART NAME	REQD	MATERIAL-DESCRIPTION	SHEET
51	DOOR TOP FRAME ASS'Y	1	.040 ALUMINUM 2024-T3	
52	DOOR BASE FRAME ASS'Y	1	" " " "	
53	CENTER BRACKET	2	" " " "	
54	RIVET	AR	AN 426 AD-4-5	
55	RIVET	AR	AN 470 AD-4-5	

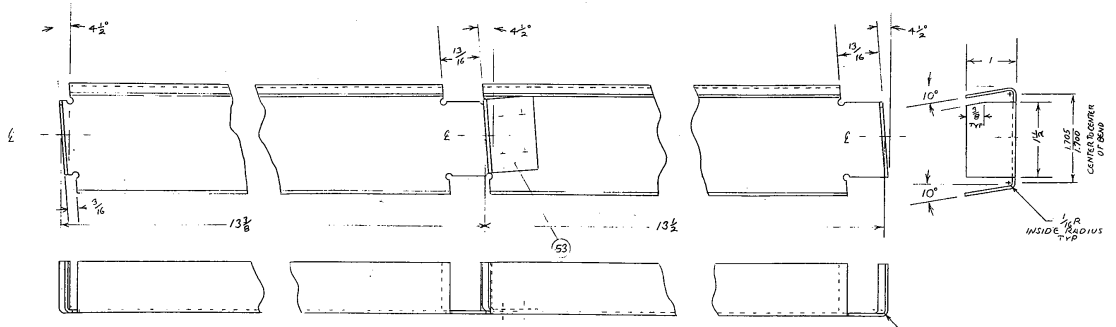

(51) DOOR TOP FRAME ASS'Y
FULL SCALE

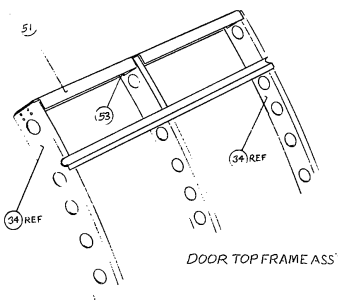

DOOR TOP FRAME ASS'Y DETAIL

This is a REDUCED PRINT

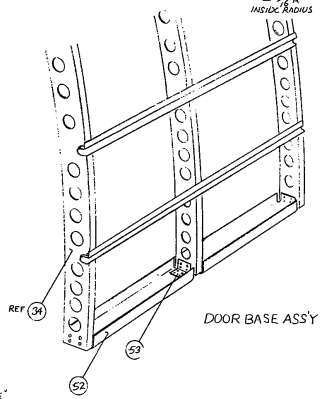

DOOR BASE ASS'Y DETAIL

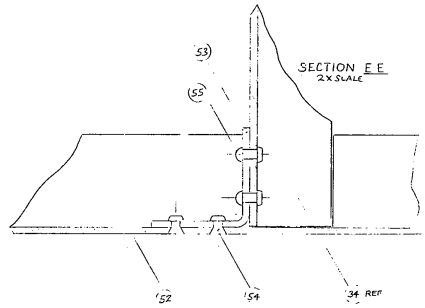

SECTION E E
2X SCALE

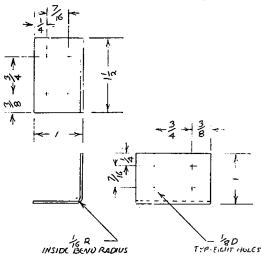

(53) CENTER BRACKET
FULL SCALE

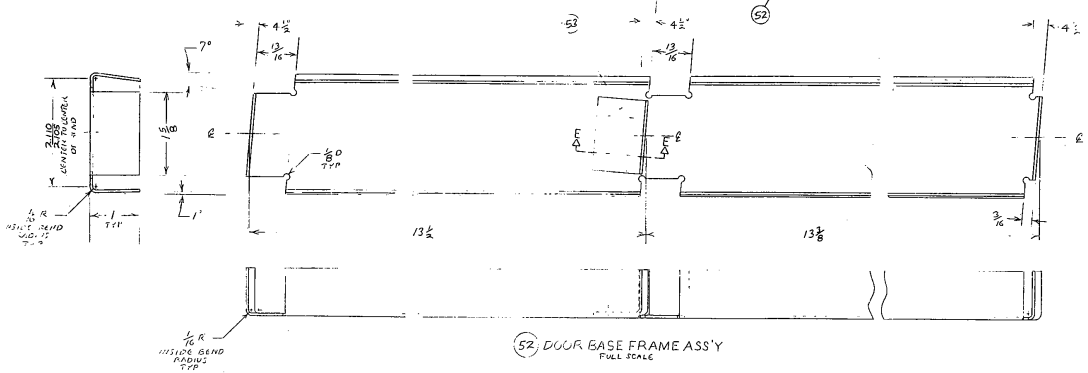

(52) DOOR BASE FRAME ASS'Y
FULL SCALE

UNLESS OTHERWISE SPECIFIED	DATE	REVISION	BY
TOLERANCES: FRACTIONS ± 1/32 DECIMALS ± .010 ANGLES ± 1 DEG. DIMENSIONS ARE IN INCHES BREAK SHARP EDGES	U.S. DEPT. OF AGRICULTURE FOREST SERVICE EQUIPMENT DEVELOPMENT CENTER MISSOULA, MONTANA		
DRAWN W KILROY	TITLE CESSNA 208 CARAVAN SMOKEJUMPER DOOR DOOR TOP & BASE FRAME ASSEMBLYS		
DESIGNED W KILROY			
CHECKED			
APPROVED			
SCALE NOTED			
DATE 12-87	SHEET 8 OF 14	MEDC-792	

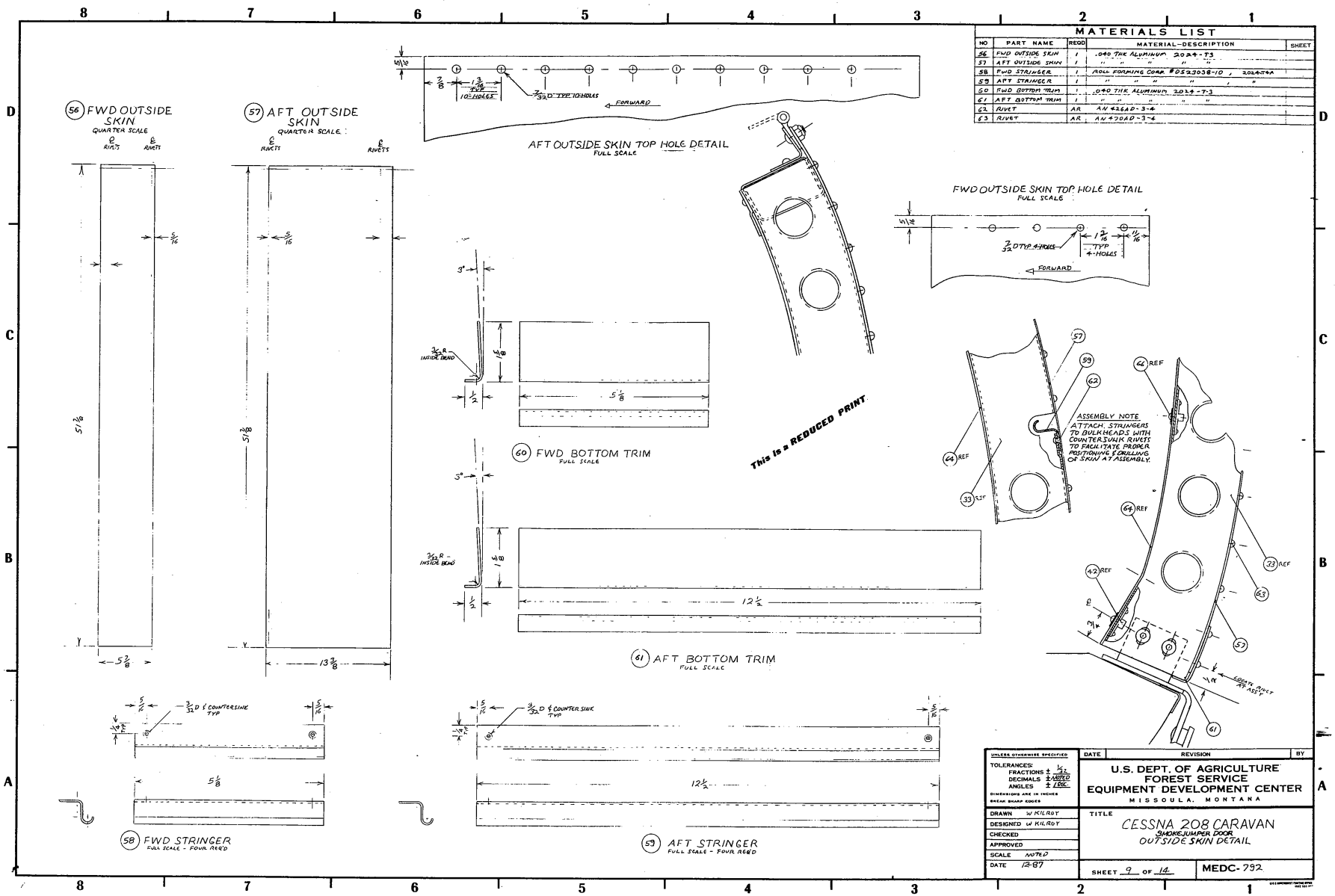

MATERIALS LIST

NO	PART NAME	REQD	MATERIAL-DESCRIPTION	SHEET
56	FWD OUTSIDE SKIN	1	.040 THK ALUMINUM 2024-T3	
57	AFT OUTSIDE SKIN	1	" " " " "	
58	FWD STRINGER	1	ROLL FORMING CORP. #D523038-10, 2024-T4A	
59	AFT STRINGER	1	" " " " , "	
60	FWD BOTTOM TRIM	1	.040 THK ALUMINUM 2024-T-3	
61	AFT BOTTOM TRIM	1	" " " " "	
62	RIVET	AR	AN 426AD-3-4	
63	RIVET	AR	AN 470AD-3-4	

UNLESS OTHERWISE SPECIFIED
TOLERANCES:
FRACTIONS ± 1/32
DECIMALS ± NOTED
ANGLES ± 1 DEG.
DIMENSIONS ARE IN INCHES
BREAK SHARP EDGES

DRAWN	W KILROY
DESIGNED	W KILROY
CHECKED	
APPROVED	
SCALE	NOTED
DATE	12-87

DATE	REVISION	BY

U.S. DEPT. OF AGRICULTURE
FOREST SERVICE
EQUIPMENT DEVELOPMENT CENTER
MISSOULA, MONTANA

TITLE
CESSNA 208 CARAVAN
SMOKEJUMPER DOOR
OUTSIDE SKIN DETAIL

SHEET 9 OF 14

MEDC-792

MATERIALS LIST				
NO	PART NAME	REQD	MATERIAL-DESCRIPTION	SHEET
64	AFT INSIDE SKIN	1	.040 THK ALUMINUM 2024-T3	
65	FWD INSIDE SKIN	1	" " " " " "	
66	CAP SCREW	24	8-32 x 3/8 BUTTON HEAD SOCKET CAP SCREWS	
67	WASHER	24	#8 x 3/8 OD McMASTER CARR #92141A009	

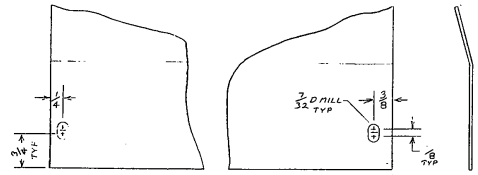

AFT INSIDE SKIN BASE DETAIL
FULL SCALE

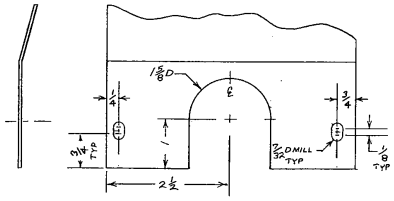

FWD INSIDE SKIN BASE DETAIL
FULL SIZE

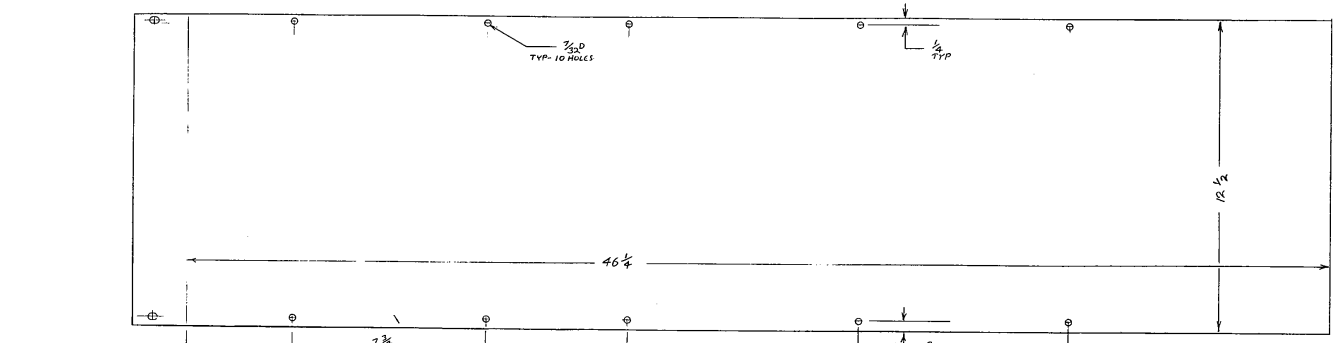

64 AFT INSIDE SKIN
HALF SCALE

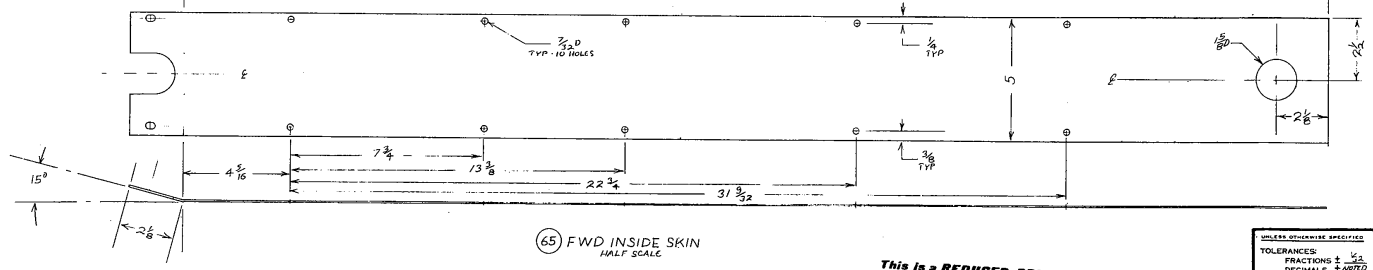

65 FWD INSIDE SKIN
HALF SCALE

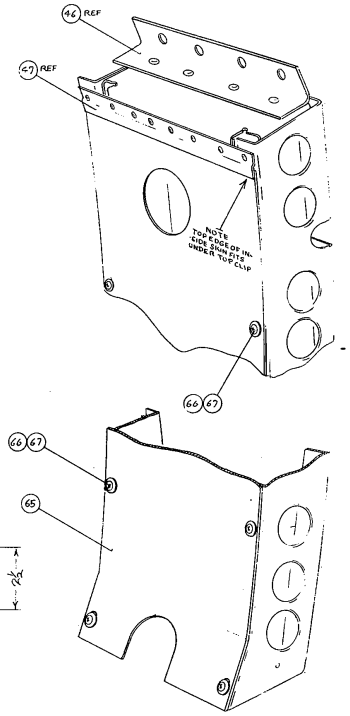

This is a REDUCED PRINT

UNLESS OTHERWISE SPECIFIED
TOLERANCES:
FRACTIONS ± 1/32
DECIMALS ± NOTED
ANGLES ± 1 DEG
DIMENSIONS ARE IN INCHES
BREAK SHARP EDGES

DATE	REVISION	BY

U.S. DEPT. OF AGRICULTURE
FOREST SERVICE
EQUIPMENT DEVELOPMENT CENTER
MISSOULA, MONTANA

DRAWN	W KILROY
DESIGNED	W KILROY
CHECKED	
APPROVED	
SCALE	NOTED
DATE	12-87

TITLE
CESSNA 208 CARAVAN
SMOKE JUMPER DOOR
INSIDE SKIN DETAIL

SHEET 10 OF 14

MEDC-792

MATERIALS LIST				
NO	PART NAME	REQD	MATERIAL-DESCRIPTION	SHEET
68	TOP SPOILER BRACKET	1	.040 THK ALUMINUM 2024-T3	
69	CENTER SPOILER			
	BRACKET	1	" " " " "	
70	SPOILER BRACKET			
	DOUBLER	1	" " " " "	

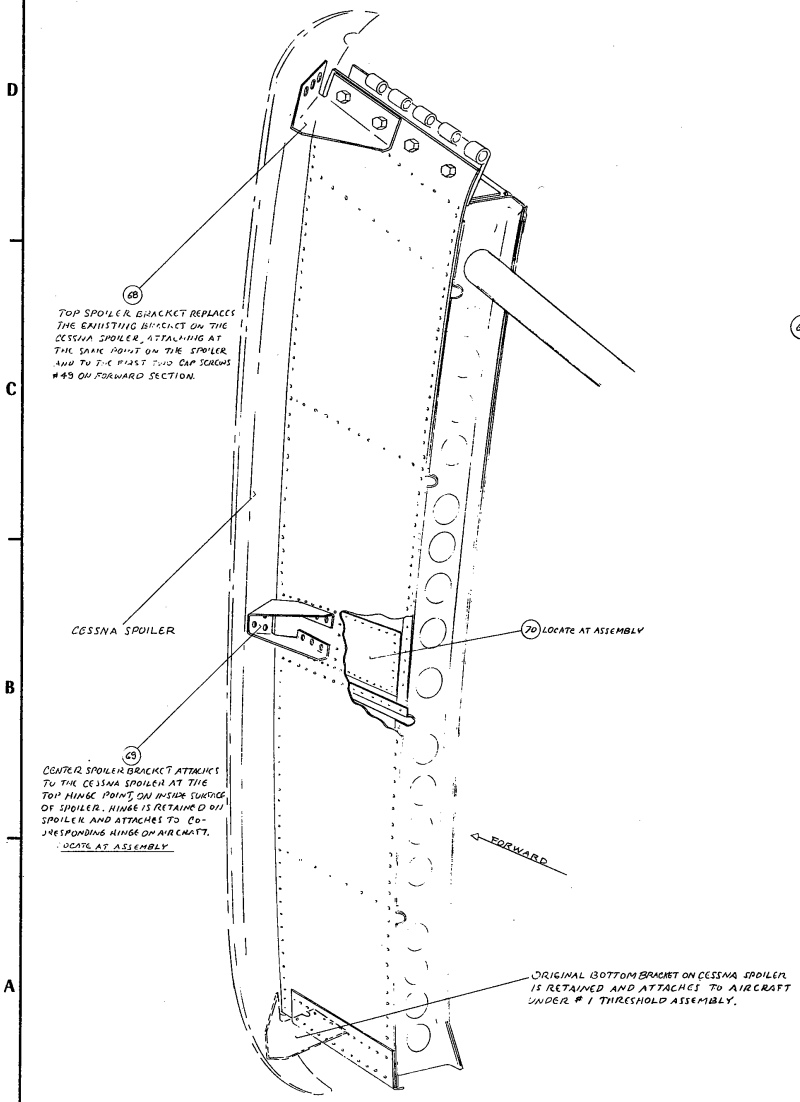

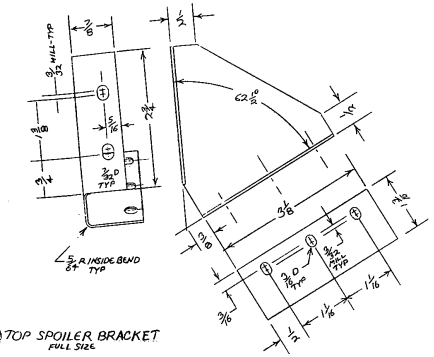

68 TOP SPOILER BRACKET
FULL SIZE

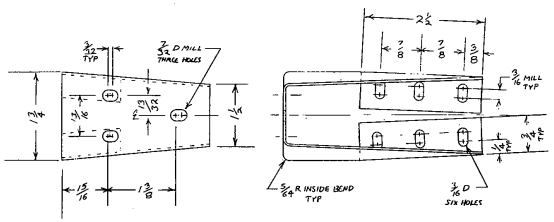

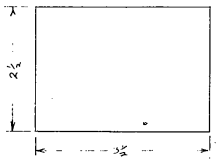

70 SPOILER BRACKET DOUBLER
FULL SIZE
LOCATE & DRILL SIX 3/16 D HOLES — FOR ATTACHMENT OF PART #69 AT ASSEMBLY

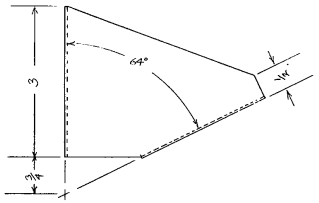

69 CENTER SPOILER BRACKET
FULL SIZE

This is a REDUCED PRINT

UNLESS OTHERWISE SPECIFIED
TOLERANCES:
FRACTIONS ± 1/32
DECIMALS ± .010 TO .030
ANGLES ± 1/2°
DIMENSIONS ARE IN INCHES
BREAK SHARP EDGES

DATE	REVISION	BY

U.S. DEPT. OF AGRICULTURE
FOREST SERVICE
EQUIPMENT DEVELOPMENT CENTER
MISSOULA, MONTANA

DRAWN	W KILROY
DESIGNED	J KILROY
CHECKED	
APPROVED	
SCALE	.10 TO .0
DATE	12-87

TITLE
CESSNA 208 CARAVAN
SMOKEJUMPER DOOR
SPOILER ATTACHMENT
BRACKETS

SHEET 11 OF 14

MEDC-792

MATERIALS LIST				
NO	PART NAME	REQD	MATERIAL-DESCRIPTION	SHEET
71	DOOR BOTTOM TRIM	1	.040 ALUMINUM SHEET 2024-T3	
72	DOOR OUTSIDE SKIN	1	" " " " "	
73	TOP FRAME-DOOR	1	" " " " "	
74	BOTTOM FRAME-DOOR	1	" " " " "	
75	ANGLE	4	" " " " "	
76	DOOR STRINGER	4	ROLL FORMING CORP #523038-10, 2024-T4A	

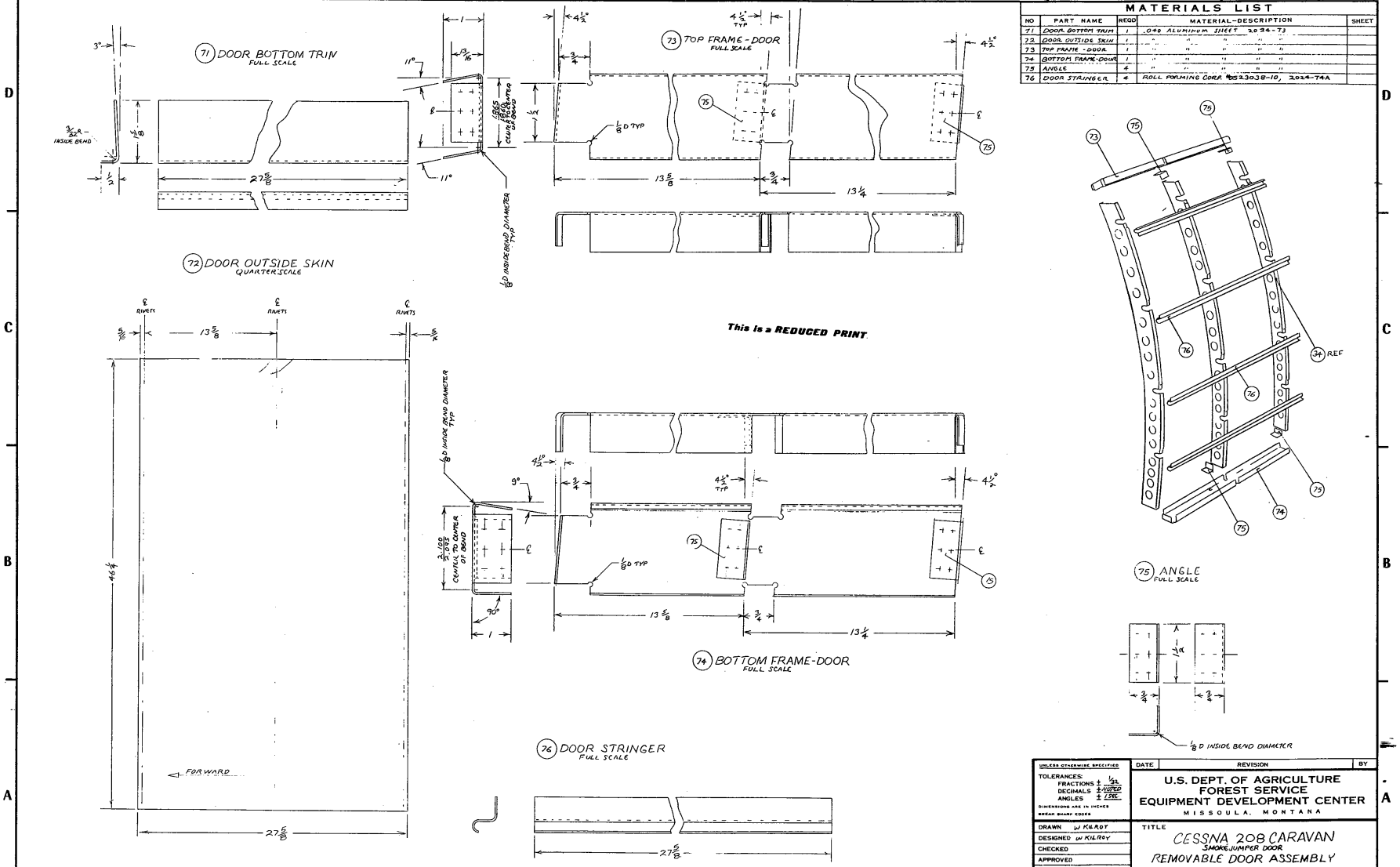

UNLESS OTHERWISE SPECIFIED	DATE	REVISION	BY
TOLERANCES: FRACTIONS ± 1/32, DECIMALS ± NOTED, ANGLES ± 1/2°			
DIMENSIONS ARE IN INCHES			
BREAK SHARP EDGES			

U.S. DEPT. OF AGRICULTURE
FOREST SERVICE
EQUIPMENT DEVELOPMENT CENTER
MISSOULA, MONTANA

DRAWN	W KILROY
DESIGNED	W KILROY
CHECKED	
APPROVED	
SCALE	NOTED
DATE	12-87

TITLE
CESSNA 208 CARAVAN
SMOKEJUMPER DOOR
REMOVABLE DOOR ASSEMBLY

SHEET 12 OF 14

MEDC-792

MATERIALS LIST

NO	PART NAME	REQD	MATERIAL-DESCRIPTION	SHEET
77	DOOR INSIDE SKIN	1	.040 ALUMINUM SHEET 2024-T3	
78	INSIDE BRACKET	8	" " " " "	
79	RIVETS	AR	CR163-4-4 CHERRY	
80	RIVETS	AR	AN 470 AD-3-4	
81	ANCHOR NUT	7	AN 366 F-832 W/COUNTER SUNK RIVET REQ'D	
82	CAP SCREW	7	6-32 X 5/8 BUTTON HEAD SOCKET W/FLAT WASHER	
83	SEAL, ROUND	AR	V56451 COWL VENT SEAL	
84	SEAL, FLAT	AR	N 27 CHAFE SEAL	

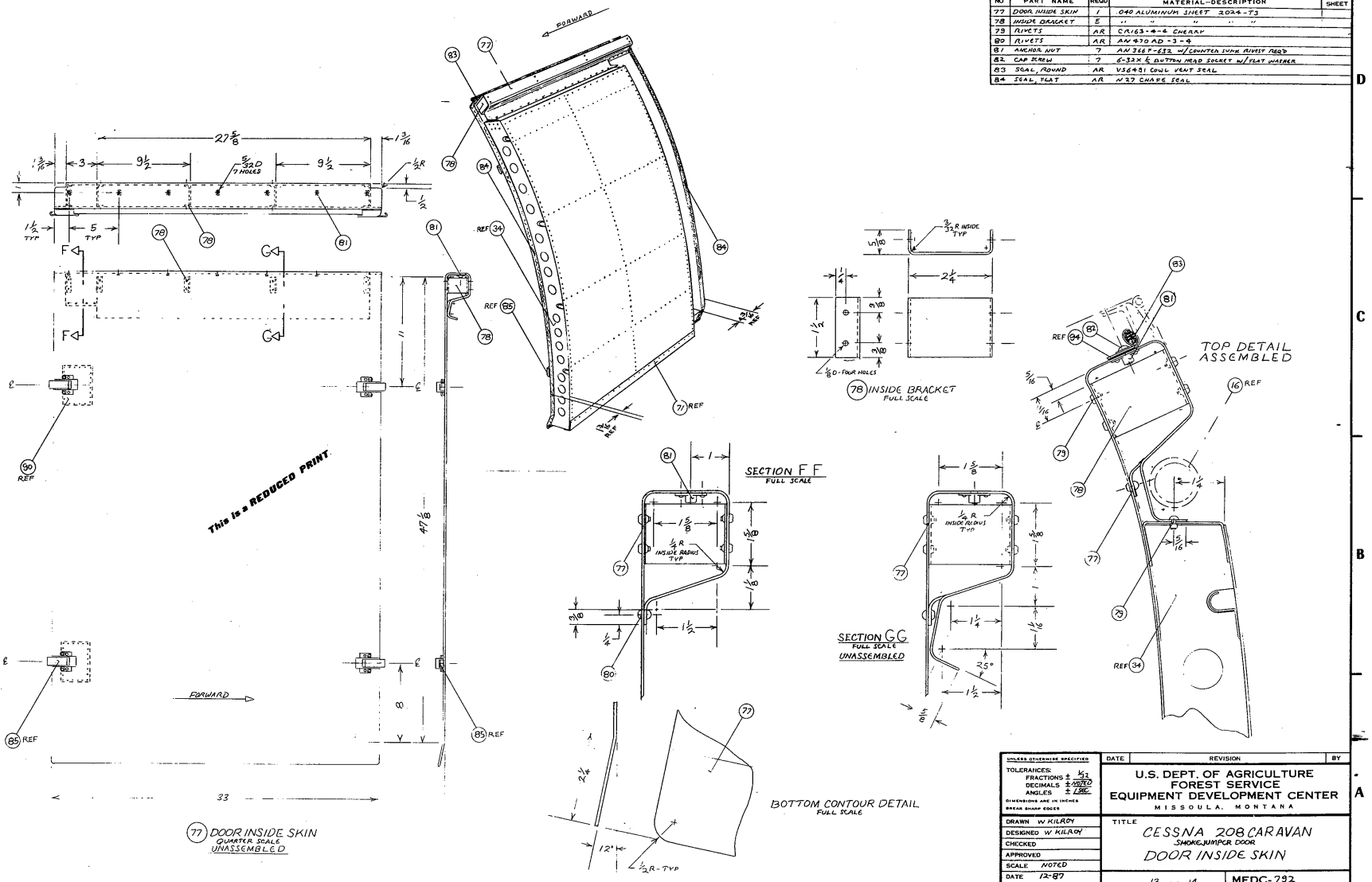

UNLESS OTHERWISE SPECIFIED TOLERANCES: FRACTIONS ± 1/32 DECIMALS ± .NOTED ANGLES ± 1/2° DIMENSIONS ARE IN INCHES BREAK SHARP EDGES	DATE	REVISION	BY
DRAWN W KILROY	U.S. DEPT. OF AGRICULTURE FOREST SERVICE EQUIPMENT DEVELOPMENT CENTER MISSOULA, MONTANA		
DESIGNED W KILROY	TITLE CESSNA 208 CARAVAN SMOKEJUMPER DOOR DOOR INSIDE SKIN		
CHECKED			
APPROVED			
SCALE NOTED			
DATE 12-87	SHEET 13 OF 14	MEDC-792	

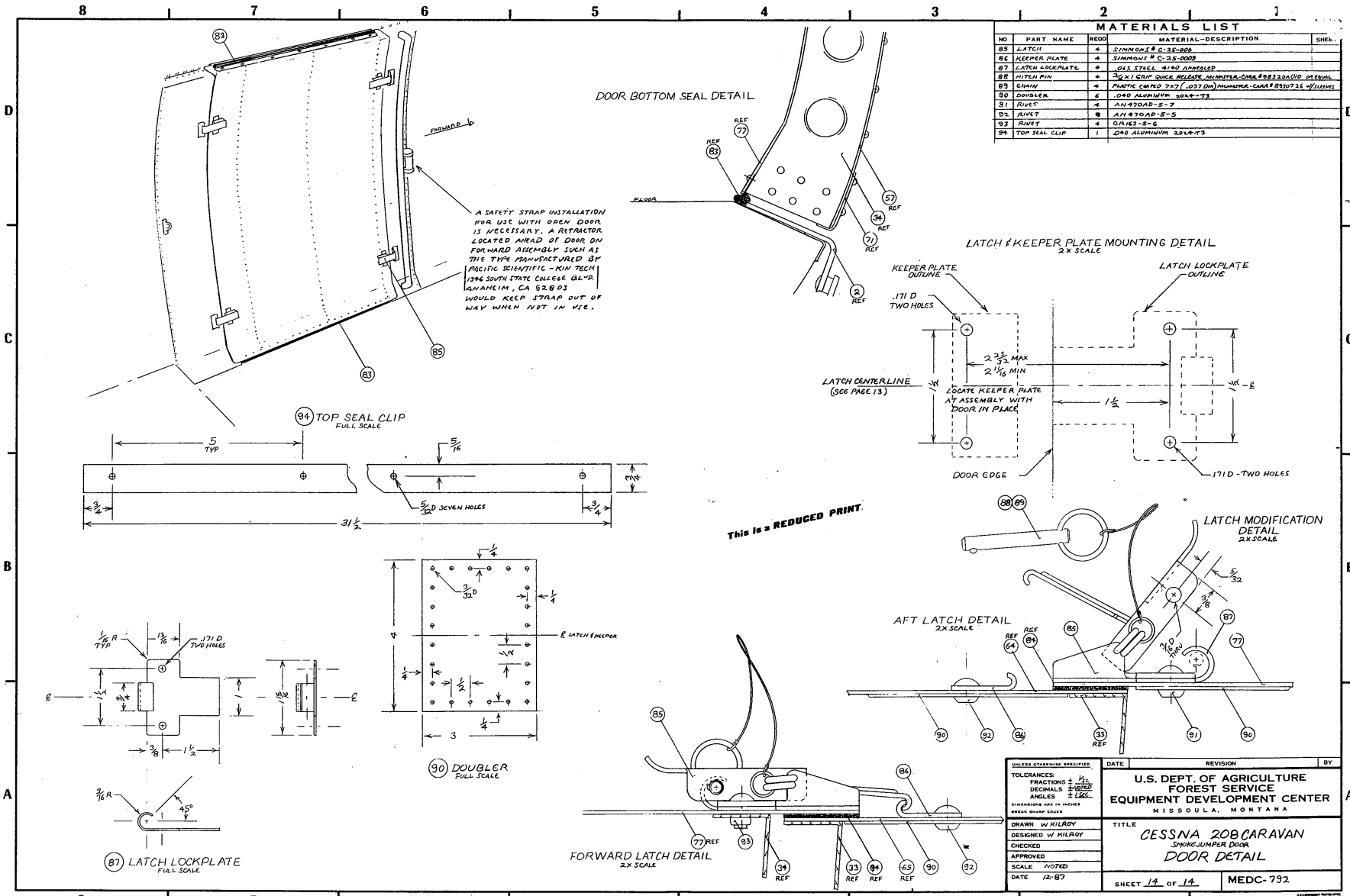

MATERIALS LIST

NO	PART NAME	REQD	MATERIAL-DESCRIPTION	SHEET
85	LATCH	4	SIMMONS # C-25-006	
86	KEEPER PLATE	4	SIMMONS # C-25-0009	
87	LATCH LOCKPLATE	4	.015 STEEL 4140 ANNEALED	
88	HITCH PIN	4	3/16 x 1 GRIP QUICK RELEASE MCMASTER-CARR #88320A010 OR EQUAL	
89	CHAIN	4	PLASTIC COATED 7x7 (.037 DIA) MCMASTER-CARR #8930T26 W/SLEEVES	
90	DOUBLER	6	.040 ALUMINUM 2024-T3	
91	RIVET	4	AN470AD-5-7	
92	RIVET	8	AN470AD-5-5	
93	RIVET	4	CR1163-5-6	
94	TOP SEAL CLIP	1	.040 ALUMINUM 2024-T3	

UNLESS OTHERWISE SPECIFIED
TOLERANCES: FRACTIONS ± 1/32, DECIMALS ±.NOTED, ANGLES ± 1 DEG.
DIMENSIONS ARE IN INCHES
BREAK SHARP EDGES

DATE	REVISION	BY

U.S. DEPT. OF AGRICULTURE
FOREST SERVICE
EQUIPMENT DEVELOPMENT CENTER
MISSOULA, MONTANA

DRAWN W KILROY
DESIGNED W KILROY
CHECKED
APPROVED
SCALE NOTED
DATE 12-87

TITLE
CESSNA 208 CARAVAN
SMOKEJUMPER DOOR
DOOR DETAIL

SHEET 14 OF 14
MEDC-792