TWIN OTTER

TWIN OTTER

Accessories Required For Smokejumping:

Primary Vertical Anchor:	MEDC 650- Anchor cable for Twin Otter 100, 200, 300 Series Aircraft STC Strength: 2,000 pounds STC #: SA210RM
Secondary Horizontal Anchor:	MEDC-753- Twin Otter Tether/Emergency Horizontal STC Strength: 750 pounds STC #: SA2751NM
Jump Step & Step Attachment and other accessories:	MEDC-759- Stepbasket (universal), Smokejumper Aircraft MEDC-794- Universal Step Strut MEDC-784- Smokejumper Equipment for Twin Otter A/C MEDC-805- Aft track Segment for Twin Otter

Special Use Twin Otter Accessories (not required for SJ Configuration):

MEDC-681- Anchor Cable, Horizontal, Twin Otter
STC Strength: 750 pounds
STC #: SA1615NM

United States of America

Department of Transportation — Federal Aviation Administration

Supplemental Type Certificate

Number SA210RM

This certificate, issued to United States Forest Service
MEDC Building #1
Fort Missoula
Missoula, Montana 59801

certifies that the change in the type design for the following product with the limitations and conditions therefor as specified hereon meets the airworthiness requirements of Part 3 *of the* Civil Air *Regulations.*

Original Product — Type Certificate Number: A9EA
Make: DeHavilland
Model: DHC-6-100, DHC-6-200, DHC-6-300.

Description of Type Design Change:

Fabrication and installation of a static line anchor cable per Drawing MEDC-650, Sheets 1, 2, and 3, dated July 1980, FAA approved January 8, 1981, or later FAA approved data.

Limitations and Conditions: This approval should not be extended to other aircraft of this model on which other previously approved modifications are incorporated unless it is determined by the installer that the interrelationship between this change and any of those other previously approved modifications will introduce no adverse effect upon the airworthiness of the aircraft.

This modification applies to Models DHC-6-100 and DHC-6-200 having DHC-6-300 seat rail configuration only.

This certificate and the supporting data which is the basis for approval shall remain in effect until surrendered, suspended, revoked, or a termination date is otherwise established by the Administrator of the Federal Aviation Administration.

Date of application: March 30, 1980

Date reissued:

Date of issuance: January 8, 1981

Date amended: February 9, 1981

By direction of the Administrator

Gerald E. Goodblood
(Signature)

Gerald E. Goodblood, Chief
Engineering and Manufacturing Branch
ARM-210
(Title)

Any alteration of this certificate is punishable by a fine of not exceeding $1,000, or imprisonment not exceeding 3 years, or both.

This certificate may be transferred in accordance with FAR 21.47.

FAA Form 8110-2 (10-68)

DEPARTMENT OF TRANSPORTATION
FEDERAL AVIATION ADMINISTRATION

ROCKY MOUNTAIN REGION
10455 EAST 25TH AVENUE
AURORA, COLORADO 80010
(303) 837-2897

January 12, 1981

F.S. R-1
RECEIVED
JAN 14 1981
MEDC

United States Forest Service
Attention: Mr. John Teatz
MEDC Building 1
Fort Missoula
Missoula, Montana 59801

Dear Mr. Teatz:

We have satisfactorily completed our evaluation of your Supplemental Type Certificate (STC) project as evidenced by the enclosed STC No. SA210RM.

A copy of this certificate must be included with each kit you have issued or each time you make the STC data available to other persons who intend to make the subject alteration on other products.

This STC is an official indication of FAA approval of your installation and may be used to authorize identical installations on other aircraft of the same model, subject to the limitations noted on it. It may be transferred, or otherwise made available to another party by means of a licensee arrangement; however, you are requested to advise this office when you transfer or grant licensee rights to the STC in order that we may take the necessary recording or reissuance action.

As recipient of this approval, except as provided in Federal Aviation Regulations (FAR) Part 21.3(d), you are required to report any failure, malfunction, or defect in any product or part manufactured by you that you have determined has resulted or could result in any of the occurrences listed in FAR Part 21.3(c). The report should be communicated initially by telephone and subsequently in writing to the Chief, Engineering and Manufacturing Branch, ARM-210, at the telephone number and address indicated above. This first contact shall take place within 24 hours after it has been determined that the failure required to be reported has occurred. FAA Form 8330-2 (Malfunction or Defect Report or any other appropriate format) is acceptable in transmitting the required details.

If you plan to manufacture or sell parts for installation on type certificated aircraft, please review FAR Part 21.303 which is applicable to replacement and modification parts. Applications for Parts Manufacturer Approval (PMA) may be made in letter form, listing the following information: (1) part name, (2) part number, (3) STC number, (4) model of type certificated product on which the part will be installed, and (5) a statement certifying that a fabrication inspection system has been established in accordance with FAR Part 21.303(h). This application should be mailed to the address indicated above.

Sincerely,

Gerald E. Goodblood
Chief, Engineering and Manufacturing Branch

Enclosure

DEPARTMENT OF TRANSPORTATION
FEDERAL AVIATION ADMINISTRATION

ROCKY MOUNTAIN REGION
10455 EAST 25TH AVENUE
AURORA, COLORADO 80010

February 10, 1981

Mr. John G. Tietz
United States Forest Service
MEDC Building Number 1
Fort Missoula
Missoula, Montana 59801

Dear Mr. Tietz:

Enclosed is your amended Supplemental Type Certificate SA210RM for the installation of a static line anchor cable in the De Havilland DHC-6-100, DHC-6-200 and DHC-6-300 aircraft. Furthermore, we are sending you your Federal Aviation Administration approved data for the installation. It is obvious that all the engineering changes you have made only strengthen the structure; however, this change does not increase the design strength that was established to be 1800 pounds. As you discussed with Frank Hardy, the only way to increase the design strength will be to resubstantiate the new structure.

Sincerely,

Gerald E. Goodblood
Engineering and
Manufacturing Branch

Enclosures

U.S. Department of Transportation
Federal Aviation Administration

NORTHWEST MOUNTAIN REGION
Denver Aircraft Certification Office
10455 East 25th Avenue - Suite 307
Aurora, Colorado 80010
Telephone: (303) 340-5575 or 5578

July 3, 1984

Mr. John Tietz
United States Forest Service
Equipment Development Center
Fort Missoula - Building #1
Missoula, Montana 59801

Dear Mr. Tietz:

Project No. SA210RM

We have received and reviewed your revised data for Supplemental Type Certificate (STC) No. SA210RM. We have satisfactorily reviewed your data as evidenced by the enclosed approved drawings.

No revision to your STC No. SA210RM is required because the enclosed data represents "later FAA approved data" as indicated on your STC.

Sincerely,

Woodford R. Boyce
Manager, Denver Aircraft
Certification Office

3 Enclosures

MEDE-650 REV B

U.S. Department
of Transportation

**Federal Aviation
Administration**

NORTHWEST MOUNTAIN REGION
Denver Aircraft Certification Office
10455 East 25th Avenue - Suite 307
Aurora, Colorado 80010
Telephone: (303) 340-5575 or 5578

July 3, 1984

Mr. John Tietz
United States Forest Service
Equipment Development Center
Fort Missoula - Building #1
Missoula, Montana 59801

Dear Mr. Tietz:

Project No. SA210RM

We have received and reviewed your revised data for Supplemental Type Certificate (STC) No. SA210RM. We have satisfactorily reviewed your data as evidenced by the enclosed approved drawings.

No revision to your STC No. SA210RM is required because the enclosed data represents "later FAA approved data" as indicated on your STC.

Sincerely,

Woodford R. Boyce
Manager, Denver Aircraft
Certification Office

3 Enclosures

MATERIALS LIST

NO	PART NAME	REQD	MATERIAL-DESCRIPTION	SHEET
1	UPPER ANCHOR ASSY	1	PARTS 2-15	2
16	STRUT ASSY	1	PARTS 17-24	3
25	BOLT	4	AN5-17A (5/16-24NF)	
26	WASHER	5	MS20002-5	
27	BOLT	4	AN4-17A (1/4-28NF)	
28	WASHER	4	MS20002-4	
29	BOLT	1	AN5-12A	
30	NUT PLATE	1	MS21078-5	
31	CABLE ASS	1	PARTS 32-33	
32	FORK END	2	MS20667-12	
33	CABLE	1	3/8 DIA 7X19 AIRCRAFT GALV. CABLE	
34	BOLT	2	AN8-20A (MIN)	
36	NUT	2	MS20365-820	
36	STOP	2	1 1/2 DIA GOGI-TG ALUM ALLOY ROUND	
37	BOLT	8	#8-32 NC X 1 LG SOCKET HD CAP SCREW	

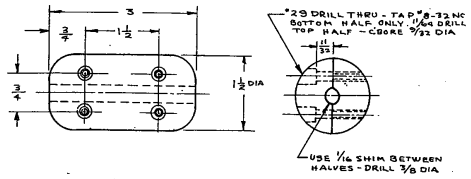

▷ (36) STOP

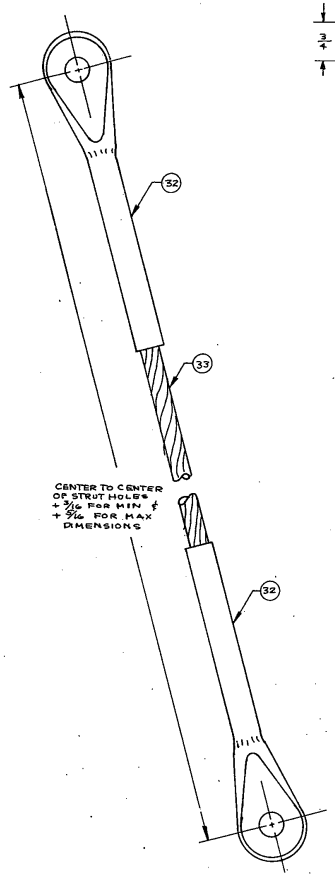

▷ (31) CABLE ASSY

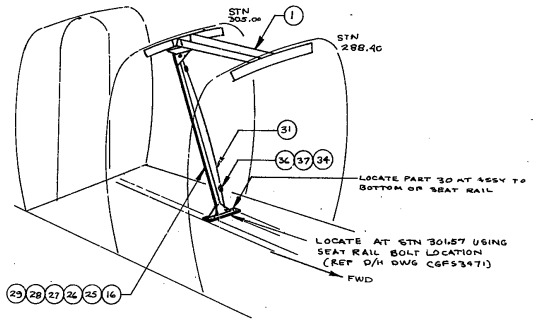

DATE	REVISION	BY
▷ 7/19/82	REDESIGN STRUT ASSY WITH 3/8 NON ADJUST	
	CABLE NEW STOPS REDRAW SHEET 1 & 3	DAL
▷ 12/80	REDESIGN STRUT ASSY SHEET 3 REDRAWN	
	DOUBLERS ARE ALL .100 THICK	DAL

TWIN OTTER ACCESS
SEE MEDC-678

STC NO. SA2101RN
JAN 8, 1981
1800 LB

UNLESS OTHERWISE SPECIFIED
TOLERANCES:
FRACTIONS ± 1/32
DECIMALS ± .005
ANGLES ± 2°
DIMENSIONS ARE IN INCHES
BREAK SHARP EDGES

DRAWN LASSILA
DESIGNED TIETZ
CHECKED
APPROVED
SCALE FULL
DATE APRIL 1984

U.S. DEPT. OF AGRICULTURE
FOREST SERVICE
EQUIPMENT DEVELOPMENT CENTER
MISSOULA, MONTANA

TITLE
ANCHOR CABLE
FOR TWIN OTTER 100, 200 & 300 SERIES AIRCRAFT

SHEET 1 OF 3 | MEDC-650 | B

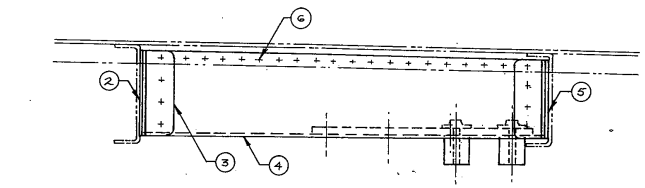

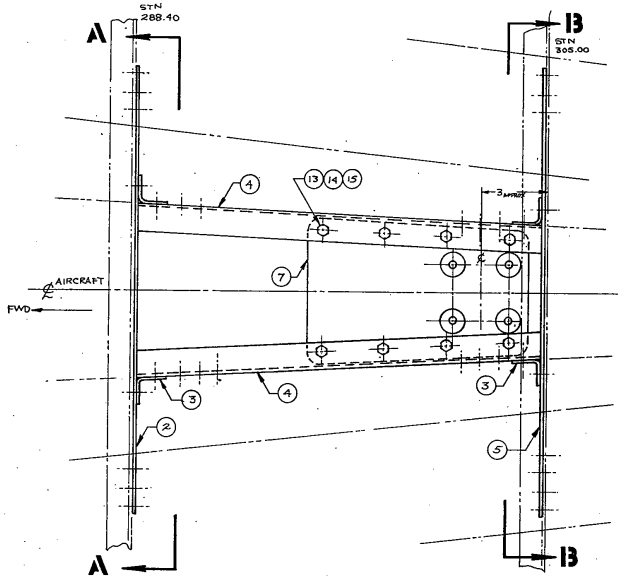

① UPPER ANCHOR ASSY

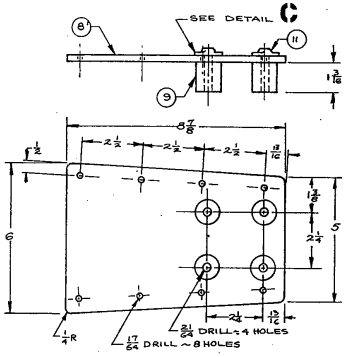

⑦ UPPER ANCHOR PLATE

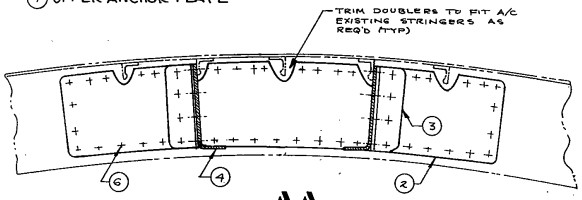

SECTION AA

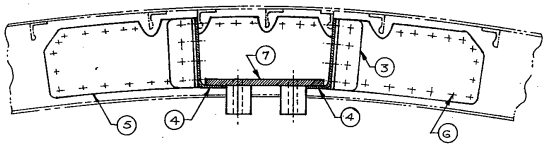

SECTION BB

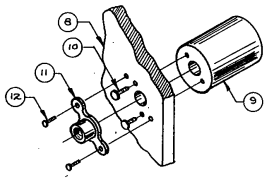

DETAIL C

RIVETTING:
USE 1/8" R.D HD RIVETS FOR RIVETTING DOUBLERS TO STRINGER AND FRAME AT .75 MAX PITCH SPACING.

MATERIALS LIST

NO	PART NAME	REQD	MATERIAL-DESCRIPTION	SHEET
1	UPPER ANCHOR ASSY	1	PARTS 2-15	
2	FWD DOUBLERS	1	.100 THICK 6061-T6 ALUM SHEET	
3	DOUBLER ANGLES	4	.100 THICK 6061-T6 ALUM SHEET	
4	DOUBLER STRINGER	2	.100 THICK 6061-T6 ALUM SHEET	
5	AFT DOUBLER	1	.100 THICK 6061-T6 ALUM SHEET	
6	RIVETS	AS REQD	FA MS 20470	
7	UPPER ANCHOR PLATE	1	PARTS 8-12	
8	PLATE	1	1/4 6061-T6 ALUM PLATE	
9	SPACER	4	1 DIA X 13/16 6061-T6 ALUM ROUND	
10	RIVETS	8	1/8 DIA FLAT HD RIVETS	
11	NUT PLATE	4	MS21078-5 (5/16-24NF)	
12	RIVETS	8	MS 20470	
13	BOLT	8	AN4-7	
14	WASHER	8	AN 960-1/4"	
15	NUT	8	MS 20365-428	

	DATE	REVISION	BY

UNLESS OTHERWISE SPECIFIED
TOLERANCES:
FRACTIONS ± 1/32
DECIMALS ± .005
ANGLES ± 2°
DIMENSIONS ARE IN INCHES
BREAK SHARP EDGES

U.S. DEPT. OF AGRICULTURE
FOREST SERVICE
EQUIPMENT DEVELOPMENT CENTER
MISSOULA, MONTANA

DRAWN LASSILA
DESIGNED CH, JT, DL
CHECKED CR + JT
APPROVED
SCALE HALF + NOTED
DATE JULY 1980

TITLE
ANCHOR CABLE
FOR TWIN OTTER 100, 200 & 300 SERIES AIRCRAFT

SHEET 2 OF 3

MEDC-650

B

MATERIALS LIST

NO	PART NAME	REQD	MATERIAL-DESCRIPTION	SHEET
16	STRUT ASSY	1	PARTS 17-24	
17	TOP PLATE	1	1/8 THICK 1020 MILD STEEL STRIP	
18	TOP GUSSETS	2	1/8 THICK 1020 MILD STEEL STRIP	
19	STRUT	1	1X 2 1/2X .065 A500 STEEL TUBING	
20	BOTTOM GUSSET 1	1	1/8 THICK 1020 MILD STEEL STRIP	
21	BOTTOM GUSSET 2	1	1/8 THICK 1020 MILD STEEL STRIP	
22	BOTTOM TUBE	1	1X 2 1/2X .065 A500 STEEL TUBING	
23	SPACERS	6	1/2 DIA 1020 MILD STEEL ROUND	
24	ENDS	2	1/16 THICK 1020 MILD STEEL STRIP	

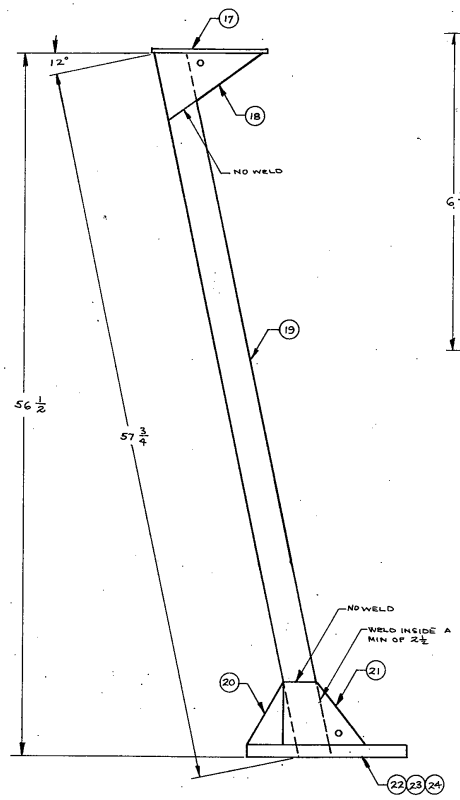

(16) STRUT ASSY
WELDED CONSTRUCTION

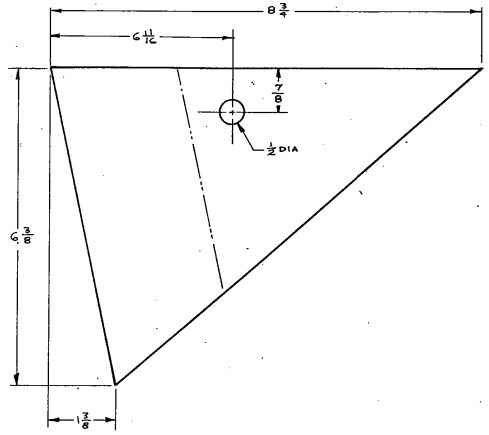

(18) TOP GUSSET

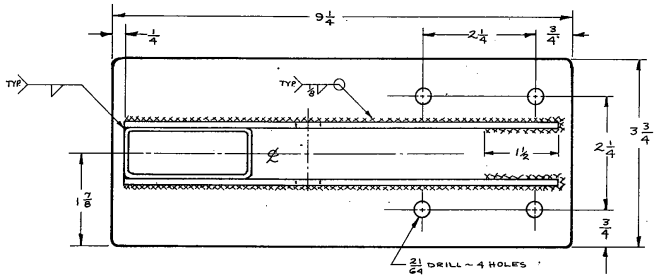

(17) TOP PLATE

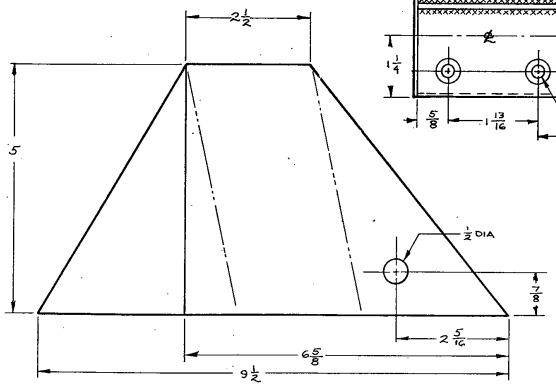

(20)(21) BOTTOM GUSSETS

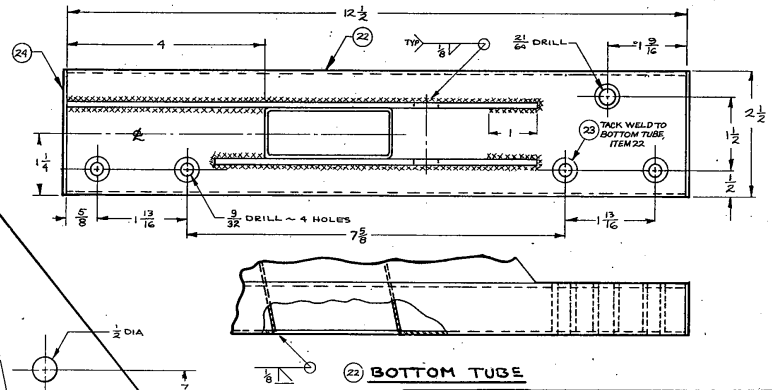

(22) BOTTOM TUBE

UNLESS OTHERWISE SPECIFIED	DATE	REVISION	BY
TOLERANCES: FRACTIONS ± 1/32, DECIMALS ± .005, ANGLES ± 2°. DIMENSIONS ARE IN INCHES. BREAK SHARP EDGES	U.S. DEPT. OF AGRICULTURE FOREST SERVICE EQUIPMENT DEVELOPMENT CENTER MISSOULA, MONTANA		
DRAWN LASSILA	TITLE ANCHOR CABLE FOR TWIN OTTER 100, 200, & 300 SERIES AIRCRAFT		
DESIGNED TIETZ			
CHECKED			
APPROVED			
SCALE FULL			
DATE APRIL 1984	SHEET 3 OF 3	MEDC-650	B

United States of America

Department of Transportation — Federal Aviation Administration

Supplemental Type Certificate

Number SA2751NM

This certificate, issued to United States Forest Service
MEDC, Building #1 - Fort Missoula
Missoula, Montana 59801

certifies that the change in the type design for the following product with the limitations and conditions therefor as specified hereon meets the airworthiness requirements of Part 3 *of the* Civil Air *Regulations.*

Original Product — Type Certificate Number: T.C. A9EA

Make: DeHavilland Aircraft ofCanada, Ltd.

Model: (Twin Otter) DHC-6, 100, 200, 300

Description of Type Design Change:

Installation of overhead cargo-dropper tether anchor in accordance with Federal Aviation Administration (FAA) sealed Drawing Number MEDC-753 dated November 1984, FAA approved May 15, 1986 or subsequent approved revsions.

Limitations and Conditions:

This approval should not be extended to other aircraft of this model on which other previously approved modifications are incorporated unless it is determined that the interrelationship between this change and any other previously approved modification will introduce no adverse effect upon the airworthiness of the aircraft.

This certificate and the supporting data which is the basis for approval shall remain in effect until surrendered, suspended, revoked, or a termination date is otherwise established by the Administrator of the Federal Aviation Administration.

Date of application: November 25, 1984 *Date reissued:*

Date of issuance: May 15, 1986 *Date amended:*

By direction of the Administrator

Woodford R. Boyce (Signature) Manager
Denver Aircraft Certification Office
Northwest Mountain Region, Aurora, Colorado
(Title)

Any alteration of this certificate is punishable by a fine of not exceeding $1,000, or imprisonment not exceeding 3 years, or both.

This certificate may be transferred in accordance with FAR 21.47.

FAA Form 8110-2 (10-68)

U.S. Department
of Transportation
**Federal Aviation
Administration**

NORTHWEST MOUNTAIN REGION
Denver Aircraft Certification Office
10455 East 25th Avenue-Suite 307
Aurora, Colorado 80010
(303) 340-5575 or 5578

MAY 15 1986

F. S. R-1
RECEIVED
MAY 1 3 1986
M E D C

U.S Forest Service
MEDC, Building #1 - Fort Missoula
Missoula, Montana 59801

Gentlemen:

Project No. A1196NMD-S

We have completed our evaluation of your supplemental type certificate (STC) project and find that you have satisfactorily demonstrated compliance with the applicable certification regulations. Accordingly, we have enclosed STC No. SA2751NM for the installation of overhead cargo-dropper tether anchor in DeHavilland DHC-6 (twin otter), 100, 200, & 300 series.

This STC is official FAA approval of your installation and may be used to authorize identical installations on other aircraft of the same model, subject to the limitations noted on the certificate. It may be transferred or otherwise made available to another party by means of a licensee arrangement in accordance with Federal Aviation Regulations (FAR) 21.47. You are requested to advise your local office within 30 days after the transfer when you transfer or grant licensee rights to the STC in order that we may take the necessary recording or reissuance action.

As recipient of this approval, except as provided in FAR 21.3(d), you are required to report any failure, malfunction, or defect in any product or part manufactured by you that you have determined has resulted or could result in any of the occurrences listed in FAR Part 21.3(c). The report should be communicated initially by telephone to the Manager, Denver Aircraft Certification Office, telephone number (303) 340-5575, within 24 hours after it has been determined that the failure has occurred. In addition, written notification to the Manager, ANM-100D, at the above address is required. FAA Form 8330-2 (Malfunction or Defect Report) or any other appropriate format is acceptable in transmitting the required details.

If you plan to manufacture replacement or modification parts for sale in conformance with approved data listed on the Certificate, you are required to comply with FAR Part 21.303. A Parts Manufacturer Approval (PMA) may be issued under the provisions of FAR 21.303(d) when you submit a statement certifying that you have established a fabrication inspection system as required by FAR 21.303(h). The identification requirements for parts produced under a PMA are in FAR 45.15. Your statement may be in letter form, with a reference to the STC number, and should be mailed to the address indicated above.

Sincerely,

Woodford R. Boyce
Manager, Denver Aircraft
Certification Office

Enclosure

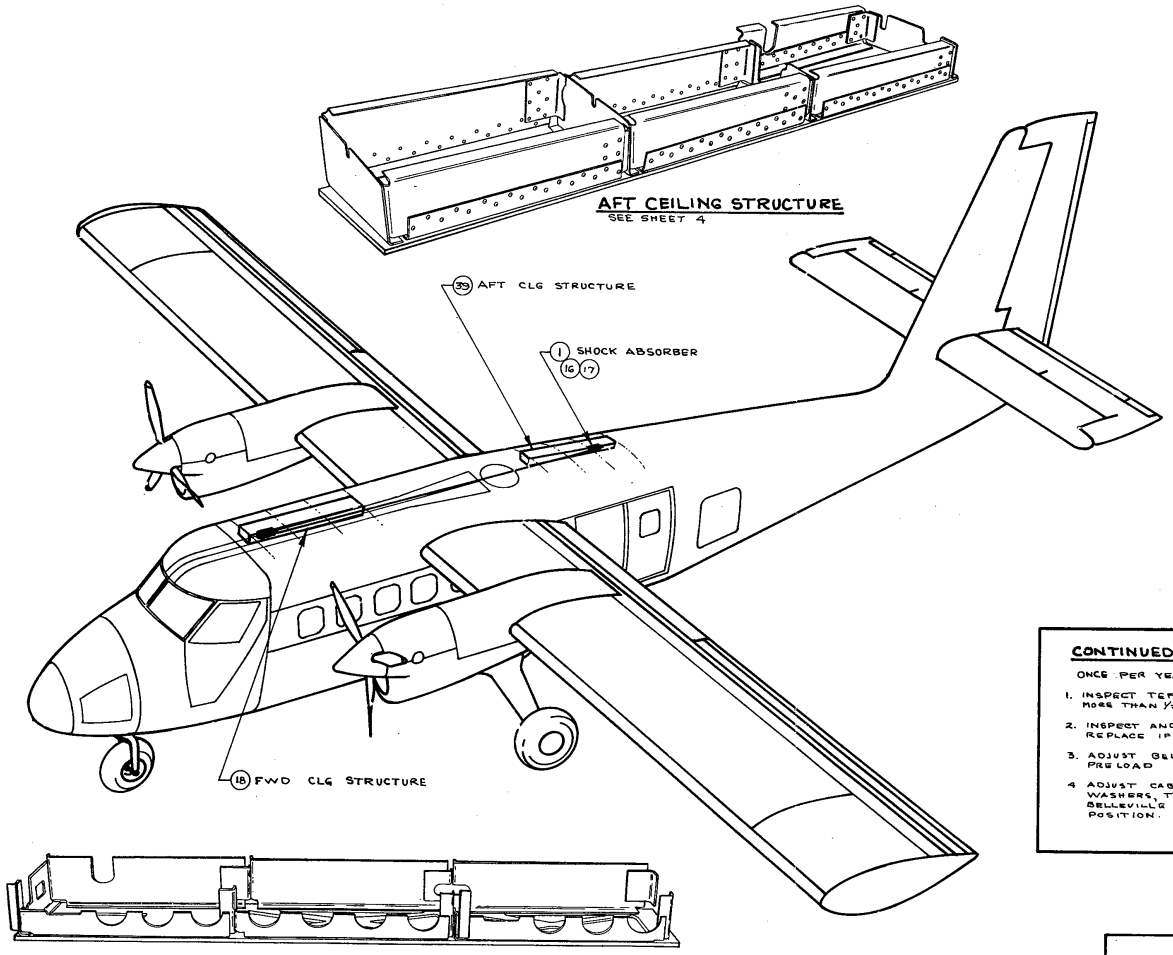

MATERIALS LIST

NO	PART NAME	REQD	MATERIAL-DESCRIPTION	SHEET
1	SHOCK ABSORBER	2	PARTS 2-15, 56-58	2
16	BOLT	16	AN3-12A	
17	WASHER	16	MS20002-5	
18	FWD CLG STRUCT	1	PARTS 19, 25-38, 59-62	3
39	AFT CLG STRUCT	1	PARTS 20, 40-55, 63-68	4

NOTES:

1. ALL WELDS AND RIVETING SHALL COMPLY WITH FAA PUBLICATION EA-AC 43.13-1A & 2A LATEST REVISION CHAPTER 2, SECTION 2 AND CHAPTER 3. WELD SYMBOLS ARE ACCORDING TO AMERICAN STANDARD WELD GRAPHICS. THE ANCHOR AND CABLE ARE TO BE MADE BY OR UNDER THE SUPERVISION OF AN FAA CERTIFIED AIRCRAFT MECHANIC.
2. THE CABLE AND ENDS ARE TO BE SWAGED IN ACCORDANCE TO FAA PUBLICATION EA-AC 43.13-1A & 2A LATEST REVISION CHAPTER 4, SECTION 1.
3. FINISH PLATES AND DOUBLERS WITH A COAT OF ZINC CHROMATE PRIMER.
4. CONTACT THE MISSOULA EQUIPMENT DEVELOPMENT CENTER, BUILDING #1, FT. MISSOULA, MISSOULA, MT. 59801, IF QUESTIONS ARISE REGARDING THIS INSTALLATION. A PHOTO PACKAGE SHOWING INSTALLATION IS AVAILABLE.

CONTINUED AIRWORTHINESS INSTRUCTIONS

ONCE PER YEAR AT TIME OF INSTALLATION:

1. INSPECT TEFLON GLIDE FOR WEAR AND REPLACE IF MORE THAN 1/2 OF THICKNESS IS WORN.
2. INSPECT AND CLEAN HOUSING AND INNER TUBE. REPLACE IF GALLED.
3. ADJUST BELLEVILLE SPRING WASHERS TO 1/8-INCH PRELOAD.
4. ADJUST CABLE TENSION TO MOVE BELLEVILLE SPRING WASHERS, THEN SLACKEN JUST ENOUGH TO ALLOW BELLEVILLE SPRING WASHERS TO RETURN TO PRELOAD POSITION.

This Is a REDUCED PRINT.

STC NO. SA2751NM
MAY 16, 1986
750 LB

UNLESS OTHERWISE SPECIFIED
TOLERANCES:
FRACTIONS ± —
DECIMALS ± —
ANGLES ± —
DIMENSIONS ARE IN INCHES
BREAK SHARP EDGES

DRAWN LASSILA
DESIGNED TIETZ
CHECKED JGT & RJK
APPROVED PIERCE
SCALE NONE
DATE NOV 1984

DATE	REVISION	BY

U.S. DEPT. OF AGRICULTURE
FOREST SERVICE
EQUIPMENT DEVELOPMENT CENTER
MISSOULA, MONTANA

TITLE
TWIN OTTER TETHER/EMERGENCY HORIZONTAL OVERHEAD ANCHOR

SHEET 1 OF 10

MEDC-753

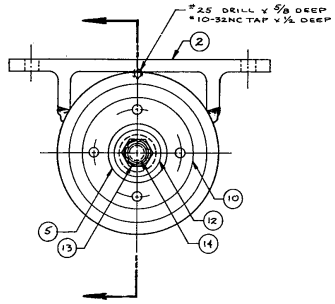

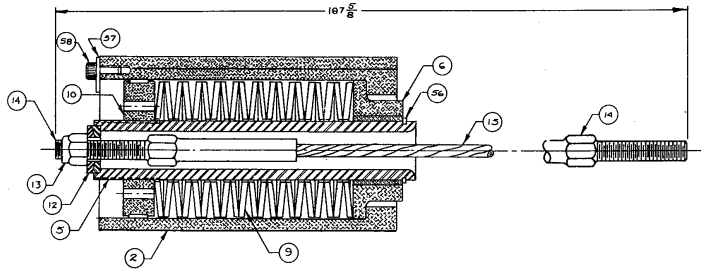

① SHOCK ABSORBER

MATERIALS LIST				
NO	PART NAME	REQ'D	MATERIAL-DESCRIPTION	SHEET
1	SHOCK ABSORBER	2	PARTS 2-15, 56-58	
2	HOUSING	2	PARTS 3-4	
3	TUBE	2	2 1/4 OD X 2 1/8 ID (.500 WALL) 6061-T651 ALUM TUBE	
4	BASE	4	6061-T651 ALUM EXTRUSION #AND 101400-4006	
5	INNER TUBE	2	1 3/4 OD X .250 WALL 4130 STEEL TUBE, CONDITION N	
6	END ASSY	2	PARTS 7-8	
7	END	2	3" OD X 1 LG 6061-T6 ALUM ALLOY ROUND	
8	BEARING	2	NYLATRON 1 1/2 OD X 1 3/16 ID X 1 LG	
9	SPRING	42	BELLEVILLE SPRING #B570-30.5-2.5 OR EQ	
10	NUT	2	3.00 X 5/8 LG 6061-T6 ALUM ALLOY ROUND	
11	GLIDE	2	1/16 THICK X 3/8 WIDE TEFLON	
12	SPHERICAL WASHER	2	TWO PIECE SPHERICAL WASHER REID #SPW-3	
13	NUT	2	MS 20365-624A	
14	TERMINAL	2	MS 21259-8R	
15	CABLE	1	1/4 DIA 7X19 GALV AIRCRAFT CABLE	
56	SNAP RING	2	TRUARC #5100-118 OR EQUAL	
57	KEEPER	2	.080 2024-T3 ALUM ALLOY SHEET	
58	SCREW	2	#10-32 NC SOCKET HD CAP SCREW x 1/2 LG	

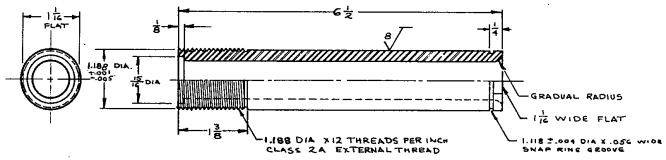

⑤ INNER TUBE

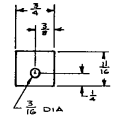

⑰ KEEPER

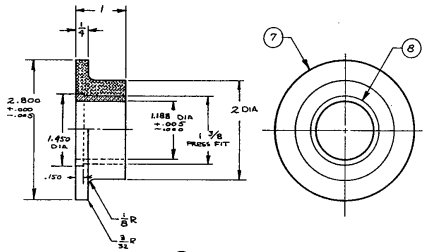

⑥ END ASSY

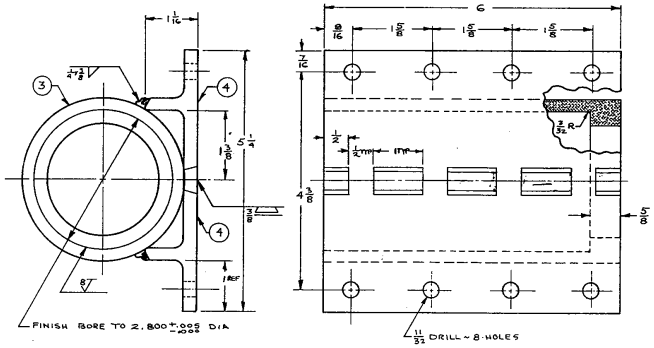

② HOUSING

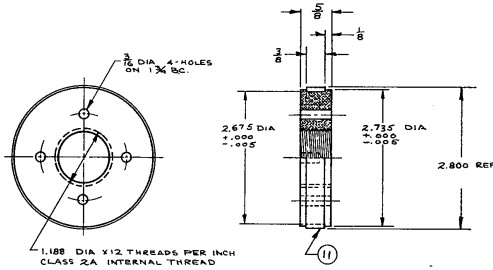

⑩ NUT

This is a REDUCED PRINT.

UNLESS OTHERWISE SPECIFIED
TOLERANCES:
FRACTIONS ± 1/32
DECIMALS ± .005
ANGLES ± —
DIMENSIONS ARE IN INCHES
BREAK SHARP EDGES

DATE	REVISION	BY

U.S. DEPT. OF AGRICULTURE
FOREST SERVICE
EQUIPMENT DEVELOPMENT CENTER
MISSOULA, MONTANA

DRAWN LASSILA
DESIGNED TIETZ
CHECKED JGT & RJK
APPROVED PIERCE
SCALE FULL
DATE NOV 1984

TITLE
TWIN OTTER TETHER/EMERGENCY HORIZONTAL OVERHEAD ANCHOR

SHEET 2 OF 10

MEDC-753

NOTES:

1. REMOVE RIVETS IN HEADLINER TRACK TO INSTALL DOUBLERS AND PLATE. RERIVET ON TOP OF PLATE AFTER FWD CEILING STRUCTURE IS INSTALLED. CUT OUT FOR THE SHOCK ABSORBER IN HEADLINER. SAVE PIECE TO COVER CUT OUT, OTHER WISE MAKE NEW HEADLINER WITH CUT OUT.

2. REMOVE FACTORY INSTALLED ANGLES. REMOVE RIVETS, SCREWS, AND TERMINAL POSTS AS REQUIRED TO INSTALL DOUBLERS. USE AS MANY OF THE SAME HOLES AS POSSIBLE. THE REMAINING HOLES SHALL BE LEFT OPEN. RELOCATE WIRES AS REQUIRED TO ELIMINATE CUTTING AND SPLICING.

3. RIVETING INTO THE BULB ANGLE STRINGER SHALL BE LOCATED IN THE MIDSECTION OF THE ANGLE.

4. LOCATE DOUBLERS IN AIRCRAFT, CUTTING AND FITTING AROUND OPENINGS AND FOR WIRES. MARK OUT RIVET PATTERN SIMILAR TO THE PARTS DRAWINGS. USE THE (4) SAME NUMBER OF FASTENERS AS SHOWN ON THE DRAWING.

5. TIGHT SPACE REQUIRES THE LOCATION AND USES OF 14 BOLTS (PARTS 60-62) AS SHOWN ON FORWARD PART OF THE PLATE INSTEAD OF RIVETS.

6. SHIMS ARE NEEDED BETWEEN DOUBLERS, FRAME AND PLATE TO LEVEL BOTTOM FOR MOUNTING THE PLATE.

7. USE MS20470AD4 SOLID RIVETS WHERE EVER POSSIBLE. WHERE BUCKING OF RIVETS IS IMPOSSIBLE USE CR3243-5 CHERRY MAX RIVETS. THE LENGTH OF RIVETS SHALL BE DETERMAINED AT ASSY. MAINTAIN MIN EDGE DISTANCE OF 1/4 INCH.

8. BEND RADIUS FOR 2024-T3 SHALL BE AS SPECIFIED IN EA-AC 43.13-1A & 2A CHAPTER 3. FORMING PARTS AND RIVETING SHALL BE AS SPECIFIED IN EA-AC 43.13-1A & 2A

MATERIALS LIST

NO	PART NAME	REQD	MATERIAL-DESCRIPTION	SHEET
59	DOUBLER #3	2	PART 59	6
60	SCREW	14	MS27039-1-12 (AN 3250 R-12)	
61	WASHER	14	AN 960-10	
62	NUT	14	MS20365-1032A	

MATERIALS LIST

NO	PART NAME	REQD	MATERIAL-DESCRIPTION	SHEET
18	FWD CLG STRUCT	1	PARTS 19,25-38,59-62	
19	PLATE	1	PARTS 21,23-24	5
25	DOUBLER #1	1	PART 25	6
26	DOUBLER #2	1	PART 26	6
27	DOUBLER #3	1	PART 27	6
28	DOUBLER #4	1	PART 28	6
29	DOUBLER #5	1	PART 29	6
30	DOUBLER #6	1	PART 30	7
31	DOUBLER #7	1	PART 31	7
32	DOUBLER #8	1	PART 32	7
33	DOUBLER #9	1	PART 33	6
34	DOUBLER #10	1	PART 34	7
35	DOUBLER #11	1	PART 35	7
36	DOUBLER #12	1	PART 36	6
37	DOUBLER #13	1	PART 37	6
38	DOUBLER #14	1	PART 38	6

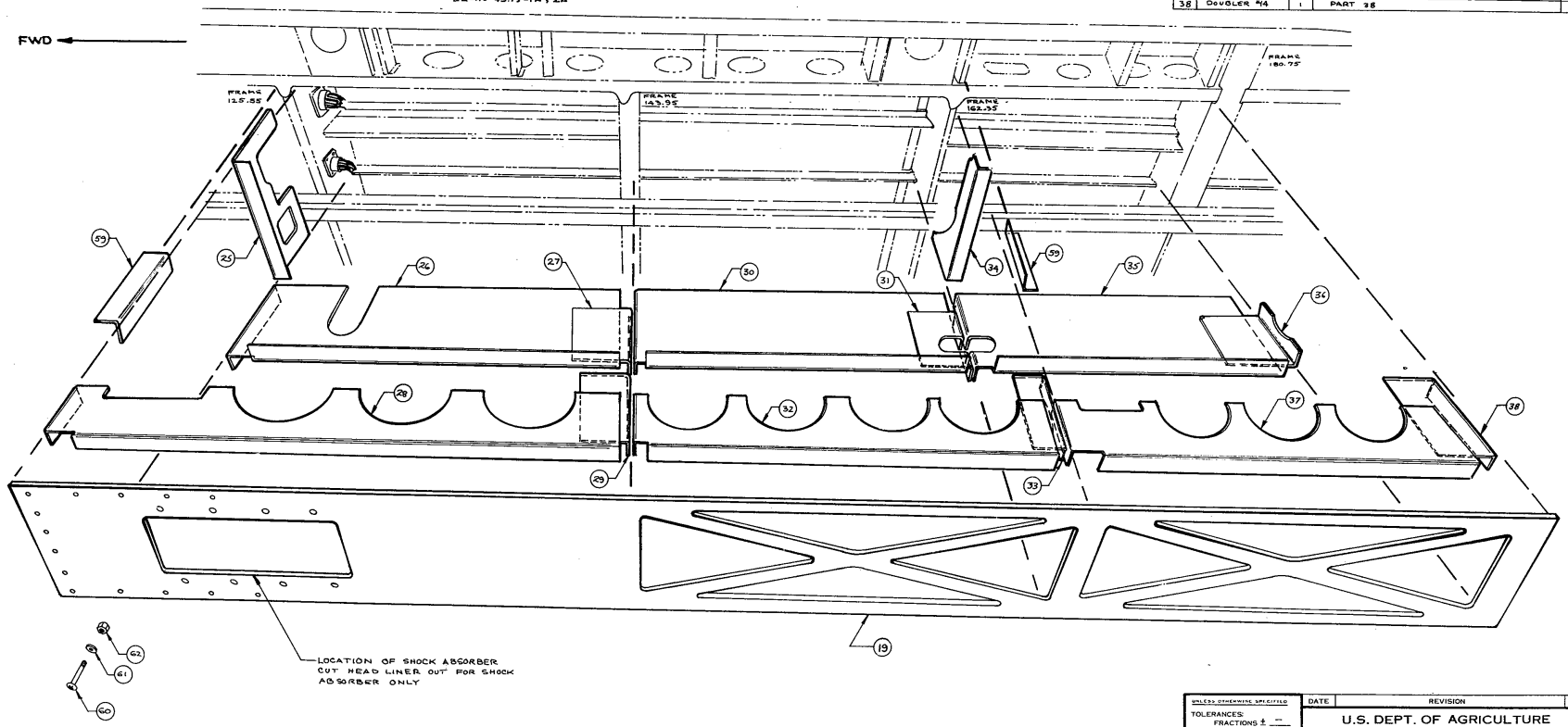

(18) FWD CEILING STRUCTURE

THE FWD STRUCTURE IS A BOX CONSTRUCTION FITTED INTO THE CEILING ABOVE THE HEAD LINER. MOUNT DOUBLERS ON EXISTING STRUCTURE.

This is a REDUCED PRINT.

UNLESS OTHERWISE SPECIFIED
TOLERANCES:
FRACTIONS ± —
DECIMALS ± —
ANGLES ± —
DIMENSIONS ARE IN INCHES
BREAK SHARP EDGES

DATE	REVISION	BY

U.S. DEPT. OF AGRICULTURE
FOREST SERVICE
EQUIPMENT DEVELOPMENT CENTER
MISSOULA, MONTANA

DRAWN LASSILA
DESIGNED TIETZ
CHECKED JGT & RJK
APPROVED PIERCE
SCALE NONE
DATE NOV 1984

TITLE
TWIN OTTER TETHER/EMERGENCY
HORIZONTAL OVERHEAD ANCHOR

SHEET 3 OF 10

MEDC-753

MATERIALS LIST

NO	PART NAME	REQD	MATERIAL-DESCRIPTION	SHEET
63	DOUBLER #32	2	PART 63	9
64	DOUBLER #33	2	PART 64	9
65	DOUBLER #34	2	PART 65	9

MATERIALS LIST

NO	PART NAME	REQD	MATERIAL-DESCRIPTION	SHEET
39	AFT CLG STRUCT	1	PARTS 20, 40-55, 63-65	
20	AFT PLATE	1	PARTS 22-24	5
40	DOUBLER #15	1	PART 40	8
41	DOUBLER #16	1	PART 41	10
42	DOUBLER #17	1	PART 42	10
43	DOUBLER #18	1	PART 43	10
44	DOUBLER #19	1	PART 44	10
45	DOUBLER #20	1	PART 45	8
46	DOUBLER #21	1	PART 46	9
47	DOUBLER #22	1	PART 47	10
48	DOUBLER #23	1	PART 48	9
49	DOUBLER #24	1	PART 49	10
50	DOUBLER #25	1	PART 50	8
51	DOUBLER #26	1	PART 51	8
52	DOUBLER #27	1	PART 52	10
53	DOUBLER #28	1	PART 63	9
54	DOUBLER #29	1	PART 64	10
55	DOUBLER #30	1	PART 55	8

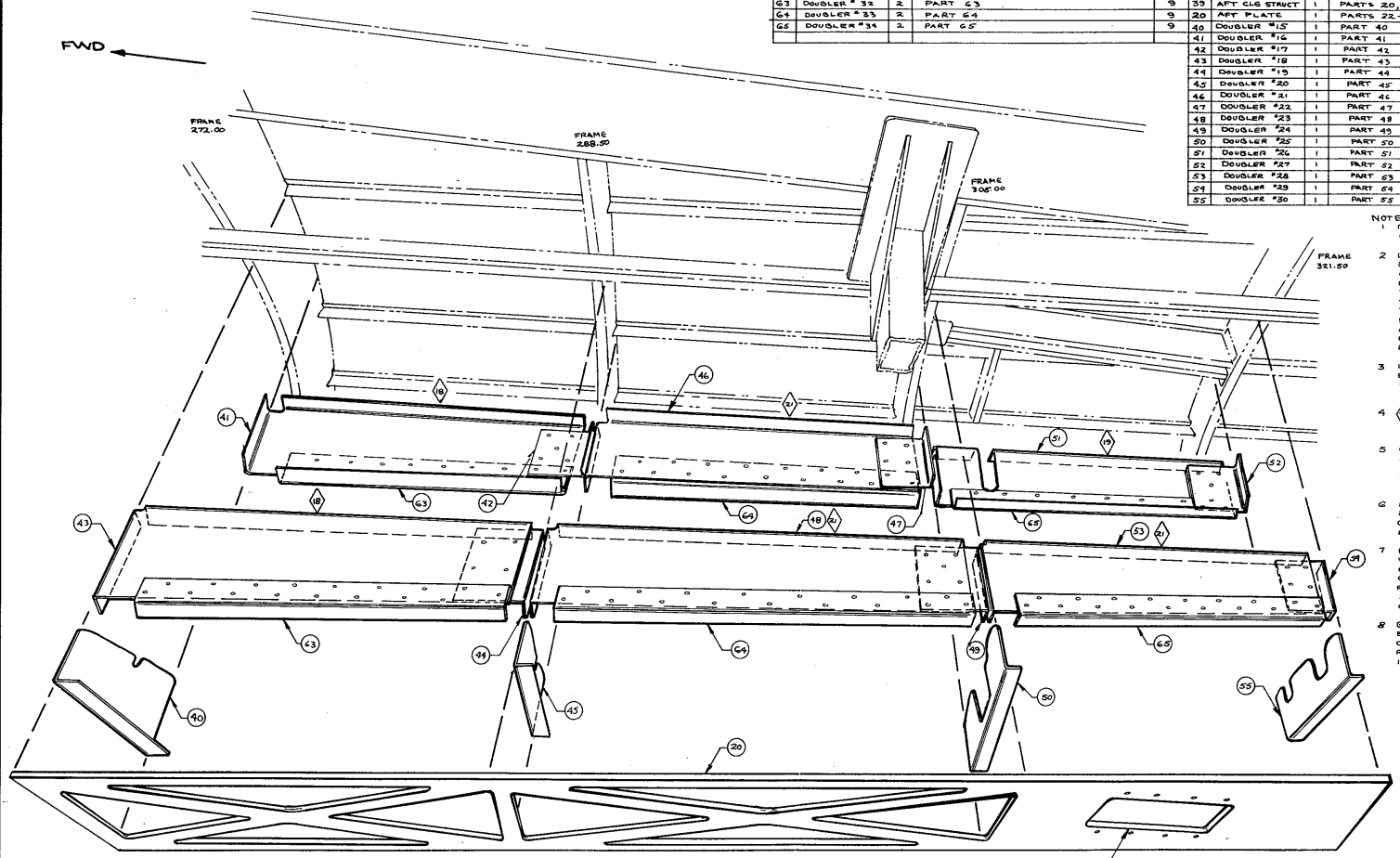

NOTES:

1. RELOCATE WIRE HARNESS FURTHER OUTBOARD.
2. LOCATE DOUBLER #15 AND DOUBLER #30 (PARTS 40 + 55) AND CLAMP IN PLACE. CLAMP THE PLATE TO THE TWO DOUBLERS, THEN LOCATE THE OTHER TWO DOUBLERS (PARTS 45 + 50). MAKE SURE THE PLATE IS FLAT AND NOT TWISTED. CLAMP IN PLACE. REMOVE PLATE AND USE TWO 1/4 X 1X 38" LG ALUM PLATS CLAMPED TO BOTTOM OF DOUBLERS, SPACED AT 8 3/8, TO LOCATE THE REMAINING DOUBLERS.
3. LOCATE THE LARGER DOUBLERS IN EACH SECTION. MARK RIVET PATTERN TO MATCH PATTERNS IN AIRCRAFT SKIN.
4. ◇ INDICATES THE MIN NUMBER OF RIVETS REQUIRED TO ATTACH EACH DOUBLER TO AIRCRAFT SKIN.
5. LOCATE THE SMALLER DOUBLERS AND MARK RIVET PATTERN. LOCATE THE END DOUBLERS AND MARK RIVET PATTERN. REMOVE, DRILL AND RIVET. RELOCATE.
6. LOCATE PLATE AND MARK RIVET PATTERN USING THE SAME NUMBER OF RIVETS INDICATED ON THE PLATE DRAWING.
7. USE MS20470AD4 SOLID RIVETS WHERE EVER POSSIBLE. WHERE BLICKING OF RIVETS IS IMPOSSIBLE USE CR3213-4 CHERRY MAX RIVETS. THE LENGTH OF RIVETS SHALL BE DETERMINED AT ASSY. MAINTAIN MIN EDGE DISTANCE OF 1/4-INCH.
8. BEND RADIUS FOR 2024-T3 SHALL BE AS SPECIFIED IN EA-AC 43.13-1A&2A CHAPTER 3. FORMING PARTS AND RIVETING SHALL BE AS SPECIFIED IN EA-AC 43.13-1A&2A

(39) AFT CEILING STRUCTURE

THE AFT STRUCTURE IS A BOX CONSTRUCTION FITTED INTO THE CEILING JUST ABOVE THE HEADLINER. MOUNT DOUBLERS TO THE FRAMES AND THE AIRCRAFT SKIN.

This is a REDUCED PRINT.

UNLESS OTHERWISE SPECIFIED
TOLERANCES:
FRACTIONS ± —
DECIMALS ± —
ANGLES ± —
DIMENSIONS ARE IN INCHES
BREAK SHARP EDGES

DATE	REVISION	BY

U.S. DEPT. OF AGRICULTURE
FOREST SERVICE
EQUIPMENT DEVELOPMENT CENTER
MISSOULA, MONTANA

DRAWN LASSILA
DESIGNED TIETZ
CHECKED JGT & RJK
APPROVED PIERCE
SCALE NONE
DATE NOV 1984

TITLE
TWIN OTTER TETHER/EMERGENCY HORIZONTAL OVERHEAD ANCHOR

SHEET 4 OF 10 MEDC-753

MATERIALS LIST

NO	PART NAME	REQD	MATERIAL-DESCRIPTION	SHEET
19	FWD PLATE	1	PARTS 21,23-24	
20	AFT PLATE	1	PARTS 22-24	
21	PLATE (FWD)	1	1/4 X 8 3/4 X 56 1/8 LG 7075-T6 ALUM ALLOY PLATE	
22	PLATE (AFT)	1	1/4 X 8 3/8 X 52 1/2 LG 7075-T6 ALUM ALLOY PLATE	
23	NUT PLATE	16	MS21078-5 5/16-24 NF	
24	RIVET	32	MS20426AD4-8	

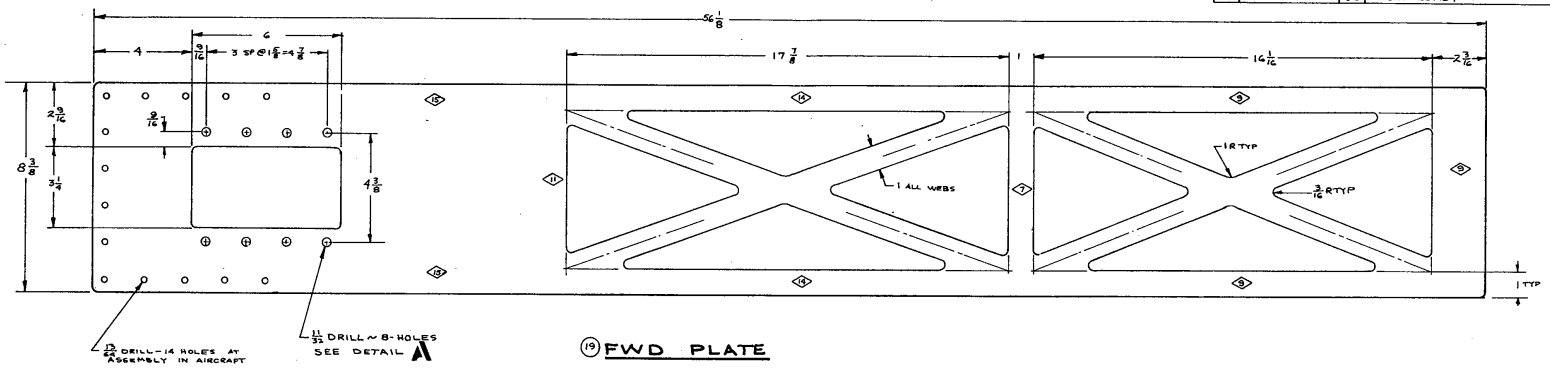

(19) FWD PLATE

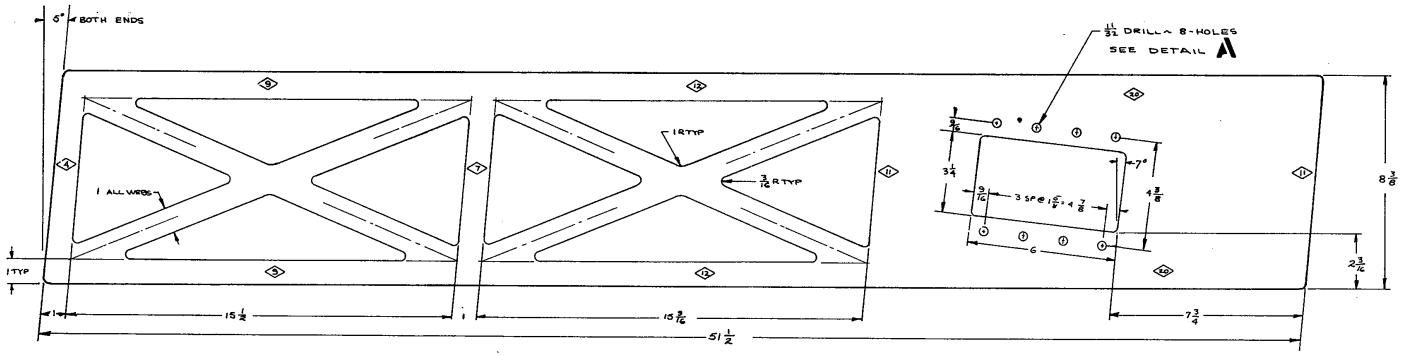

(20) AFT PLATE

This is a REDUCED PRINT.

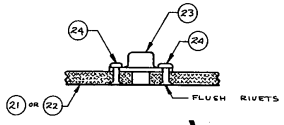

DETAIL A
FULL SCALE

(22) INDICATES THE MIN. NUMBER OF RIVETS REQUIRED TO FASTEN PLATE TO EACH DOUBLER. SPACING TO BE DETERMINED AT ASSEMBLY

UNLESS OTHERWISE SPECIFIED
TOLERANCES:
FRACTIONS ± 1/32
DECIMALS ± —
ANGLES ± 1°
DIMENSIONS ARE IN INCHES
BREAK SHARP EDGES

DATE	REVISION	BY

U.S. DEPT. OF AGRICULTURE
FOREST SERVICE
EQUIPMENT DEVELOPMENT CENTER
MISSOULA, MONTANA

DRAWN LASSILA
DESIGNED TIETZ
CHECKED JGT & RJK
APPROVED PIERCE
SCALE HALF & NOTED
DATE NOV 1984

TITLE
TWIN OTTER TETHER/EMERGENCY HORIZONTAL OVERHEAD ANCHOR

SHEET 5 OF 10

MEDC-753

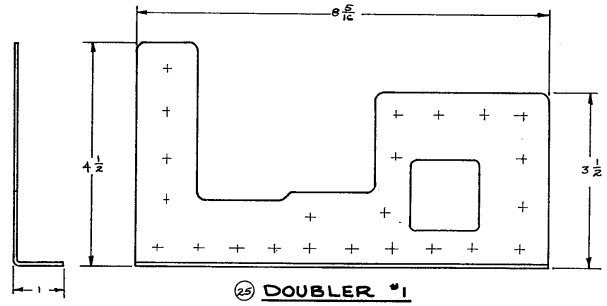

(25) DOUBLER #1

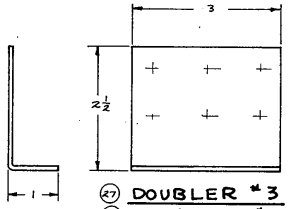

(27) DOUBLER #3
(36) DOUBLER #12

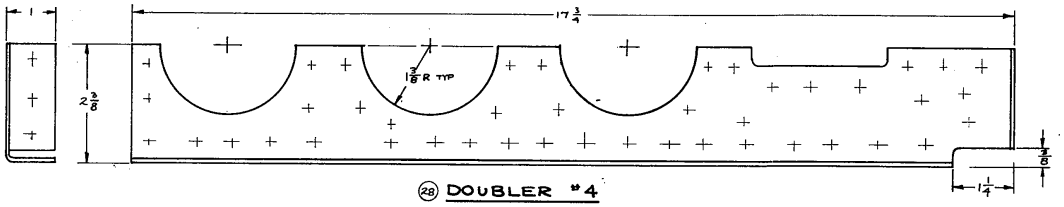

(28) DOUBLER #4

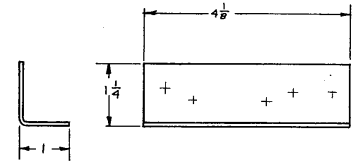

(29) DOUBLER #5
(33) DOUBLER #9
(38) DOUBLER #14

USE DRAWING AS FULL SIZE PATTERNS FOR IRREGULAR SHAPE OF DOUBLERS.

+ INICATES NUMBER OF AND APPROXIMATE LOCATION OF RIVETS AND FASTENERS

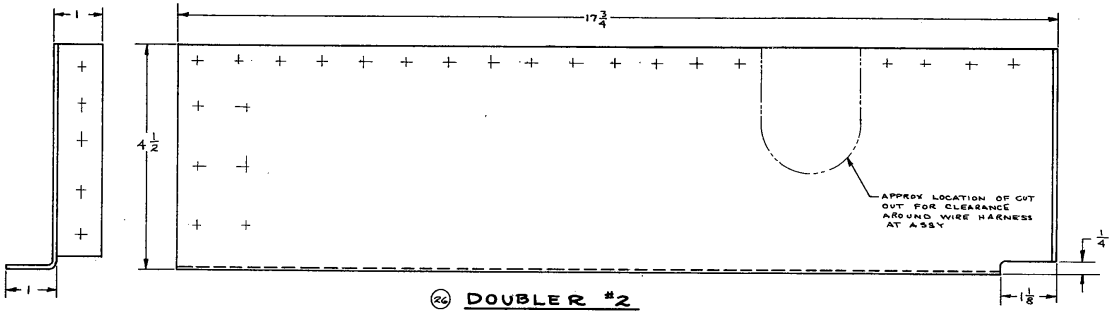

(26) DOUBLER #2

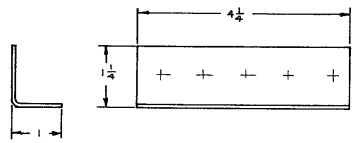

(59) DOUBLER #31

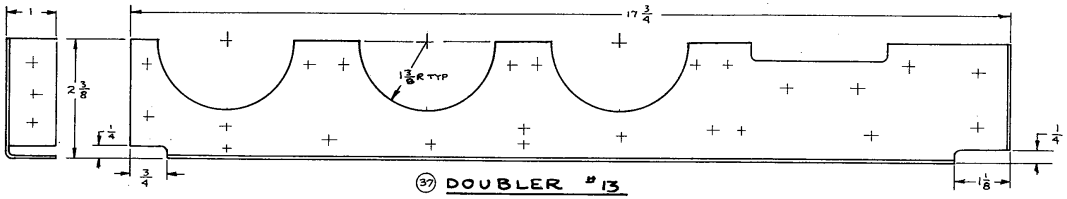

(37) DOUBLER #13

This is a REDUCED PRINT.

MATERIALS LIST

NO	PART NAME	REQD	MATERIAL-DESCRIPTION	SHEET
25	DOUBLER #1	1	.080 2024-T3 ALUM ALLOY SHEET	
26	DOUBLER #2	1	.080 2024-T3 ALUM ALLOY SHEET	
27	DOUBLER #3	1	.080 2024-T3 ALUM ALLOY SHEET	
28	DOUBLER #4	1	.080 2024-T3 ALUM ALLOY SHEET	
29	DOUBLER #5	1	.080 2024-T3 ALUM ALLOY SHEET	
33	DOUBLER #9	1	.063 2024-T3 ALUM ALLOY SHEET	
36	DOUBLER #12	1	.040 2024-T3 ALUM ALLOY SHEET	
37	DOUBLER #13	1	.040 2024-T3 ALUM ALLOY SHEET	
38	DOUBLER #14	1	.040 2024-T3 ALUM ALLOY SHEET	
59	DOUBLER #31	2	.040 2024-T3 ALUM ALLOY SHEET	

UNLESS OTHERWISE SPECIFIED
TOLERANCES:
FRACTIONS ± 1/32
DECIMALS ± .01
ANGLES ± 1/2°
DIMENSIONS ARE IN INCHES
BREAK SHARP EDGES

DATE	REVISION	BY

U.S. DEPT. OF AGRICULTURE
FOREST SERVICE
EQUIPMENT DEVELOPMENT CENTER
MISSOULA, MONTANA

DRAWN LASSILA
DESIGNED TIETZ
CHECKED JGT & RJK
APPROVED PIERCE
SCALE FULL
DATE NOV 1984

TITLE
TWIN OTTER TETHER/EMERGENCY HORIZONTAL OVERHEAD ANCHOR

SHEET 6 OF 10

MEDC-753

MATERIALS LIST				
NO	PART NAME	REQD	MATERIAL-DESCRIPTION	SHEET
30	DOUBLER #6	1	.063 THICK 2024-T3 ALUM ALLOY SHEET	
31	DOUBLER #7	1	.063 THICK 2024-T3 ALUM ALLOY SHEET	
32	DOUBLER #8	1	.081 THICK 2024-T3 ALUM ALLOY SHEET	
34	DOUBLER #10	1	.080 THICK 2024-T3 ALUM ALLOY SHEET	
35	DOUBLER #11	1	.040 THICK 2024-T3 ALUM ALLOY SHEET	

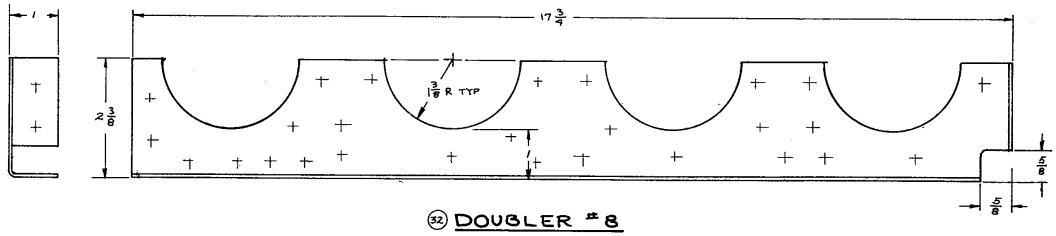

(32) DOUBLER #8

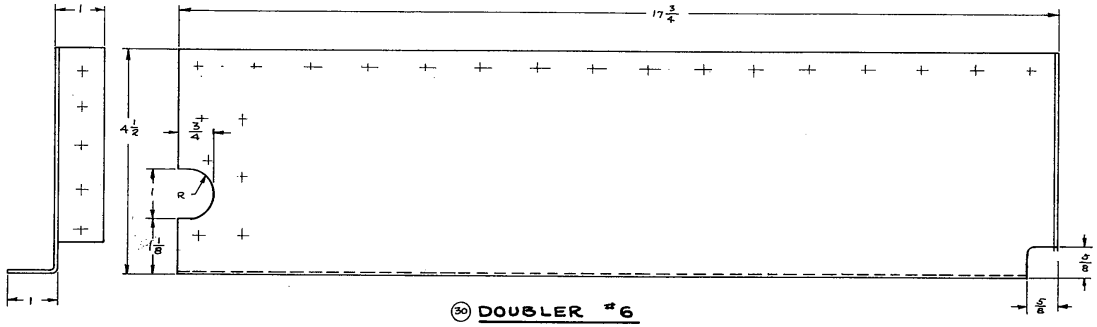

(30) DOUBLER #6

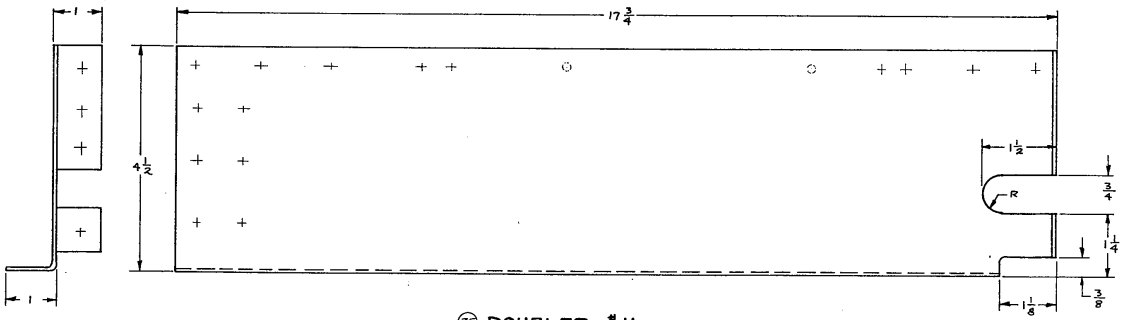

(35) DOUBLER #11

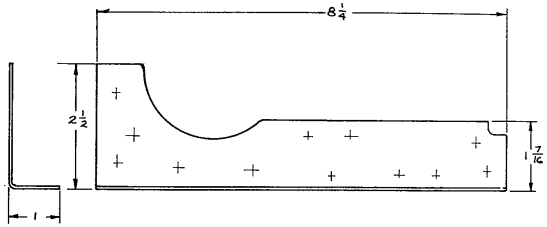

(34) DOUBLER #10

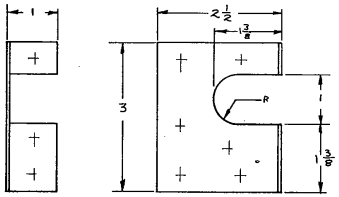

(31) DOUBLER #7

USE DRAWING AS FULL SIZE PATTERNS FOR IRREGULAR SHAPES OF DOUBLERS.

+ INDICATES THE NUMBER OF AND APPROXIMATE LOCATION OF RIVETS AND FASTENERS.

This is a REDUCED PRINT.

UNLESS OTHERWISE SPECIFIED TOLERANCES: FRACTIONS ± 1/32 DECIMALS ± ___ ANGLES ± ___ DIMENSIONS ARE IN INCHES BREAK SHARP EDGES	DATE / REVISION / BY	U.S. DEPT. OF AGRICULTURE FOREST SERVICE EQUIPMENT DEVELOPMENT CENTER MISSOULA, MONTANA
DRAWN LASSILA DESIGNED TIETZ CHECKED JGT & RJK APPROVED PIERCE SCALE FULL DATE NOV 1984	TITLE TWIN OTTER TETHER/EMERGENCY HORIZONTAL OVERHEAD ANCHOR	SHEET 7 OF 10 — MEDC-753

MATERIALS LIST

NO	PART NAME	REQD	MATERIAL-DESCRIPTION	SHEET
40	DOUBLER #15	1	.080 2024-T3 ALUM ALLOY SHEET	
45	DOUBLER #20	1	.080 2024-T3 ALUM ALLOY SHEET	
50	DOUBLER #25	1	.080 2024-T3 ALUM ALLOY SHEET	
51	DOUBLER #26	1	.080 2024-T3 ALUM ALLOY SHEET	
55	DOUBLER #30	1	.080 2024-T3 ALUM ALLOY SHEET	

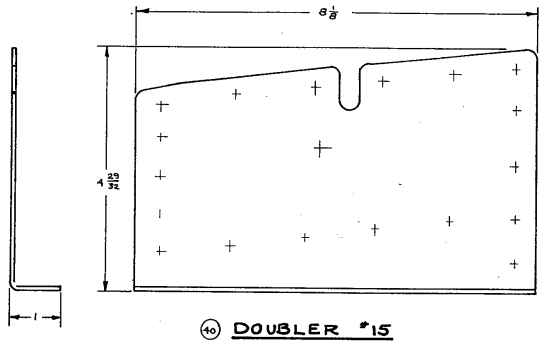

(40) DOUBLER #15

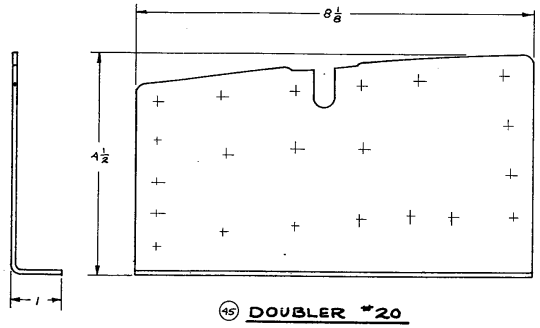

(45) DOUBLER #20

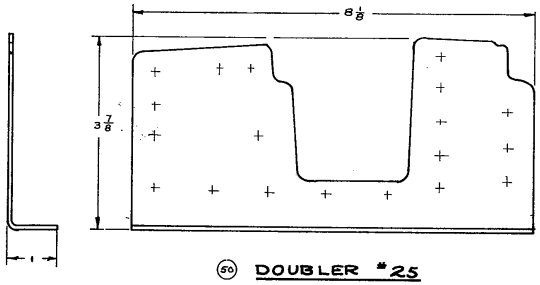

(50) DOUBLER #25

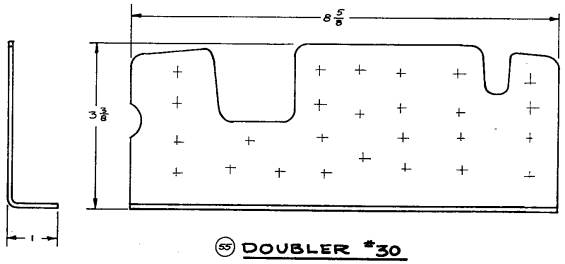

(55) DOUBLER #30

USE DRAWING AS FULL SIZE PATTERNS FOR IRREGULAR SHAPES OF DOUBLERS.

+ INDICATES THE NUMBER OF AND APPROXIMATE LOCATION OF RIVETS AND FASTENERS.

This is a REDUCED PRINT.

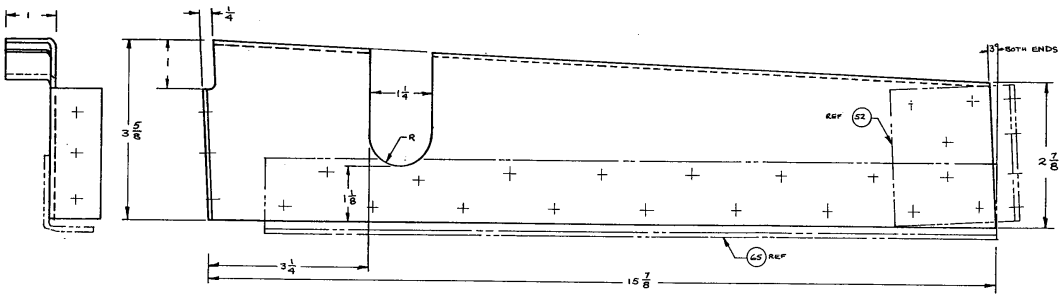

(51) DOUBLER #26

UNLESS OTHERWISE SPECIFIED	DATE	REVISION	BY
TOLERANCES: FRACTIONS ± 1/32, DECIMALS ±, ANGLES ± 1°	U.S. DEPT. OF AGRICULTURE FOREST SERVICE EQUIPMENT DEVELOPMENT CENTER MISSOULA, MONTANA		
DIMENSIONS ARE IN INCHES BREAK SHARP EDGES			
DRAWN LASSILA	TITLE TWIN OTTER TETHER/EMERGENCY HORIZONTAL OVERHEAD ANCHOR		
DESIGNED TIETZ			
CHECKED JGT & RJK			
APPROVED PIERCE			
SCALE FULL			
DATE NOV 1984	SHEET 8 OF 10	MEDC-753	

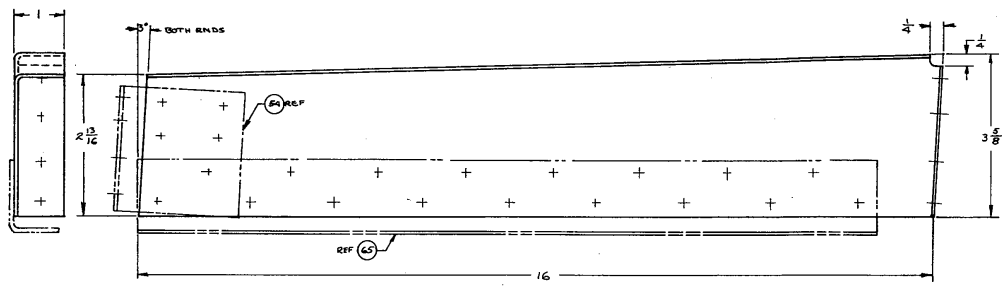

53 DOUBLER # 28

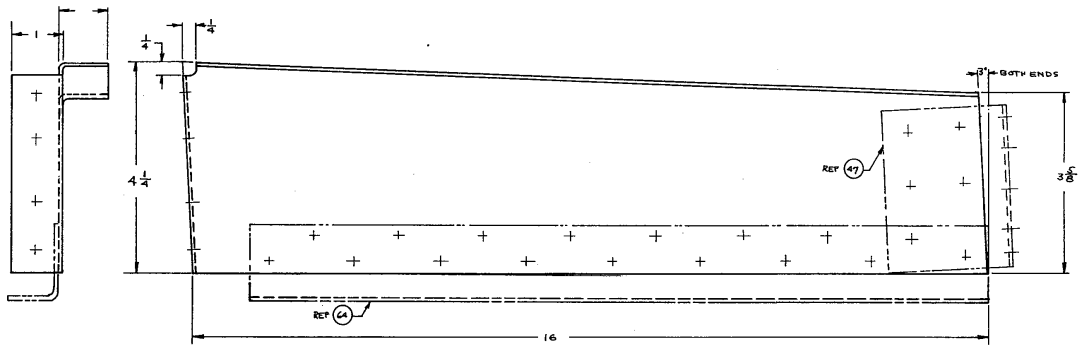

46 DOUBLER # 21

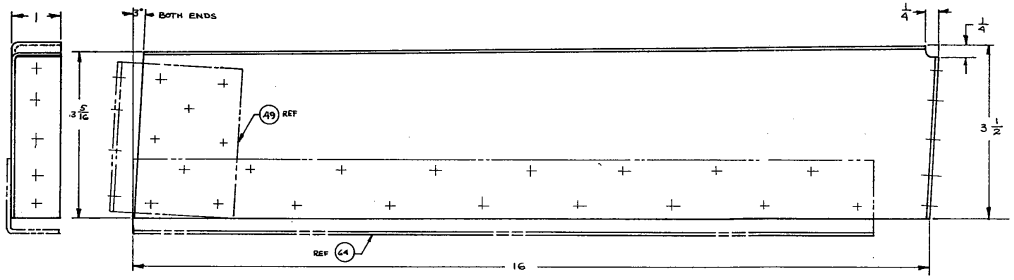

48 DOUBLER # 23

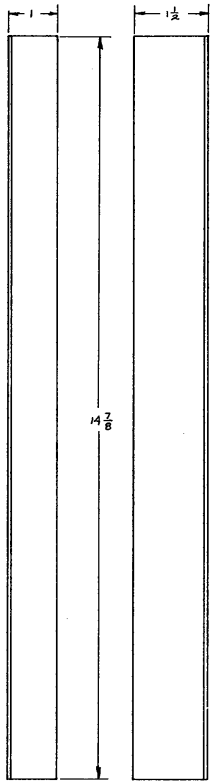

USE DRAWING AS FULL SIZE PATTERNS FOR IRREGULAR SHAPES OF DOUBLERS.

+ INDICATES THE NUMBER OF AND APPROXIMATE LOCATION OF RIVETS AND FASTENERS.

63 DOUBLER # 32
64 DOUBLER # 33
65 DOUBLER # 34

This is a REDUCED PRINT.

MATERIALS LIST

NO	PART NAME	REQD	MATERIAL-DESCRIPTION	SHEET
46	DOUBLER # 21	1	.063 2024-T3 ALUM ALLOY SHEET	
48	DOUBLER # 23	1	.063 2024-T3 ALUM ALLOY SHEET	
53	DOUBLER # 28	1	.080 2024-T3 ALUM ALLOY SHEET	
63	DOUBLER # 32	2	.040 2024-T3 ALUM ALLOY SHEET	
64	DOUBLER # 33	2	.063 2024-T3 ALUM ALLOY SHEET	
65	DOUBLER # 34	2	.080 2024-T3 ALUM ALLOY SHEET	

UNLESS OTHERWISE SPECIFIED
TOLERANCES:
FRACTIONS ± 1/32
DECIMALS ± -
ANGLES ± 1°
DIMENSIONS ARE IN INCHES
BREAK SHARP EDGES

DATE	REVISION	BY

U.S. DEPT. OF AGRICULTURE
FOREST SERVICE
EQUIPMENT DEVELOPMENT CENTER
MISSOULA, MONTANA

DRAWN LASSILA
DESIGNED TIETZ
CHECKED JGT & RJK
APPROVED PIERCE
SCALE FULL
DATE Nov 1984

TITLE
TWIN OTTER TETHER/EMERGENCY HORIZONTAL OVERHEAD ANCHOR

SHEET 9 OF 10

MEDC-753

MATERIALS LIST

NO	PART NAME	REQD	MATERIAL-DESCRIPTION	SHEET
41	DOUBLER #16	1	.040 2024-T3 ALUM ALLOY SHEET	
42	DOUBLER #17	1	.040 2024-T3 ALUM ALLOY SHEET	
43	DOUBLER #18	1	.040 2024-T3 ALUM ALLOY SHEET	
44	DOUBLER #19	1	.040 2024-T3 ALUM ALLOY SHEET	
47	DOUBLER #22	1	.063 2024-T3 ALUM ALLOY SHEET	
49	DOUBLER #24	1	.063 2024-T3 ALUM ALLOY SHEET	
52	DOUBLER #27	1	.080 2024-T3 ALUM ALLOY SHEET	
54	DOUBLER #29	1	.080 2024-T3 ALUM ALLOY SHEET	

USE DRAWING AS FULL SIZE PATTERNS FOR IRREGULAR SHAPES OF DOUBLERS.

+ INDICATES THE NUMBER OF AND APPROXIMATE LOCATION OF RIVETS AND FASTENERS.

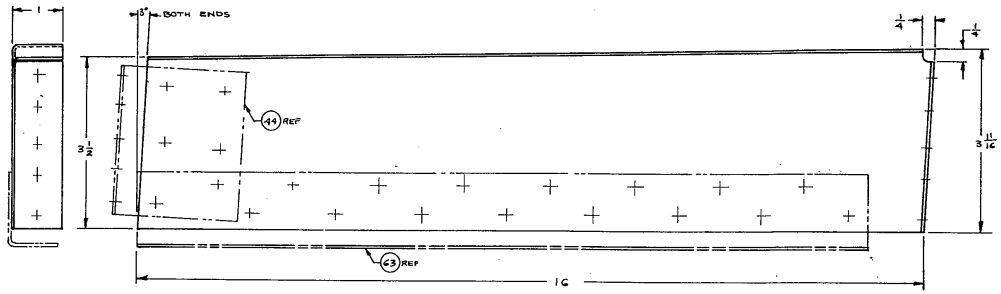

43 DOUBLER #18

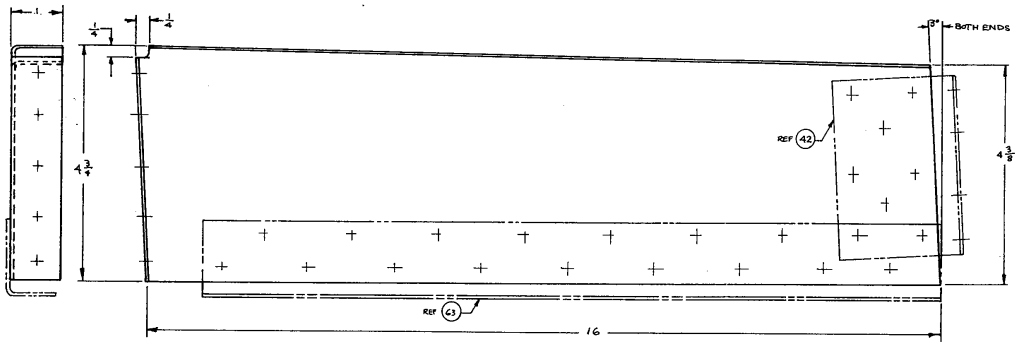

41 DOUBLER #16

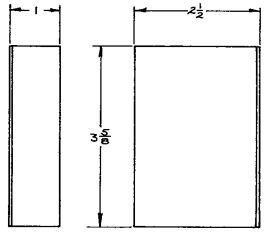

42 DOUBLER #17

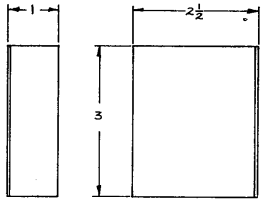

44 DOUBLER #19

49 DOUBLER #24

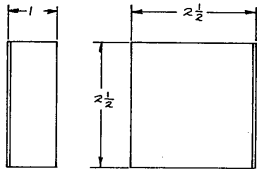

54 DOUBLER #29

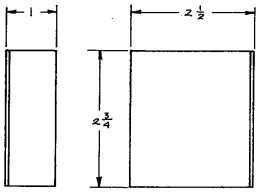

52 DOUBLER #27

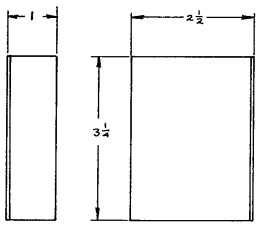

47 DOUBLER #22

This is a REDUCED PRINT.

UNLESS OTHERWISE SPECIFIED	DATE	REVISION	BY
TOLERANCES: FRACTIONS ± 1/32, DECIMALS ±, ANGLES ± 1° DIMENSIONS ARE IN INCHES BREAK SHARP EDGES	U.S. DEPT. OF AGRICULTURE FOREST SERVICE EQUIPMENT DEVELOPMENT CENTER MISSOULA, MONTANA		
DRAWN LASSILA	TITLE TWIN OTTER TETHER/EMERGENCY HORIZONTAL OVERHEAD ANCHOR		
DESIGNED TIETZ			
CHECKED JGT & RJK			
APPROVED PIERCE			
SCALE FULL			
DATE NOV 1984	SHEET 10 OF 10	MEDC-753	

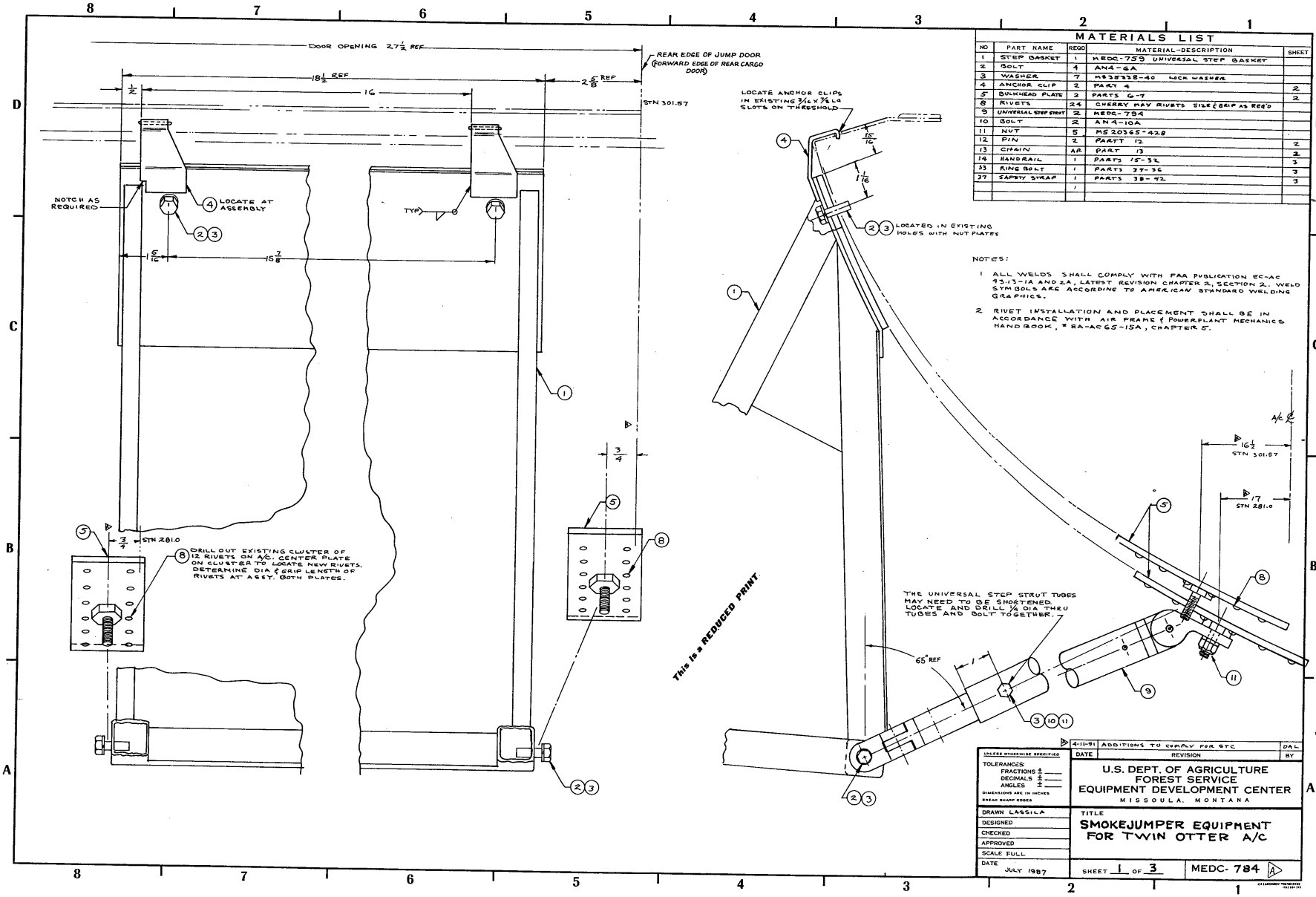

NOTES:

1. ALL WELDS SHALL COMPLY WITH FAA PUBLICATION EC-AC 43.13-1A AND 2A, LATEST REVISION CHAPTER 2, SECTION 2. WELD SYMBOLS ARE ACCORDING TO AMERICAN STANDARD WELDING GRAPHICS.
2. RIVET INSTALLATION AND PLACEMENT SHALL BE IN ACCORDANCE WITH AIR FRAME & POWERPLANT MECHANICS HANDBOOK, # FA-AC65-15A, CHAPTER 5.

MATERIALS LIST

NO	PART NAME	REQD	MATERIAL-DESCRIPTION	SHEET
1	STEP GASKET	1	MEDC-759 UNIVERSAL STEP GASKET	
2	BOLT	4	AN4-6A	
3	WASHER	7	MS35338-40 LOCK WASHER	
4	ANCHOR CLIP	2	PART 4	2
5	BULKHEAD PLATE	2	PARTS 6-7	2
8	RIVETS	24	CHERRY MAY RIVETS SIZE & GRIP AS REQ'D	
9	UNIVERSAL STEP STRUT	2	MEDC-794	
10	BOLT	2	AN4-10A	
11	NUT	5	MS20365-428	
12	PIN	2	PARTT 12	2
13	CHAIN	AR	PART 13	2
14	HANDRAIL	1	PARTS 15-32	3
33	RING BOLT	1	PARTS 34-36	3
37	SAFETY STRAP	1	PARTS 38-42	3

DATE	REVISION	BY
4-11-91	ADDITIONS TO COMPLY FOR STC	DAL

UNLESS OTHERWISE SPECIFIED
TOLERANCES:
FRACTIONS ± ____
DECIMALS ± ____
ANGLES ± ____
DIMENSIONS ARE IN INCHES
BREAK SHARP EDGES

DRAWN LAGSILA
DESIGNED
CHECKED
APPROVED
SCALE FULL
DATE JULY 1987

U.S. DEPT. OF AGRICULTURE
FOREST SERVICE
EQUIPMENT DEVELOPMENT CENTER
MISSOULA, MONTANA

TITLE
SMOKEJUMPER EQUIPMENT FOR TWIN OTTER A/C

SHEET 1 OF 3

MEDC-784 A

MATERIALS LIST				
NO	PART NAME	REQD	MATERIAL-DESCRIPTION	SHEET
12	PIN	2	AN416-1, STEEL, CADMIUM PLATED.	
13	CHAIN	AR	WELDLESS SASH CHAIN #8, NUMASTER-CARR.# 3207T54, OR EQ	
			WITH ½ DIA. SPLIT RINGS.	
4	ANCHOR CLIP	2	1/8 x 1¼ SAE 1018 CR STEEL STRIP	
5	BULKHEAD PLATE	2	PARTS 6-7	
6	PLATE	2	3/16 x 2 x 5 3/16 LG SAE 1018 CR STL STRIP	
7	STUD	2	¾ HEX SAE 41L40 CR STL HEX	

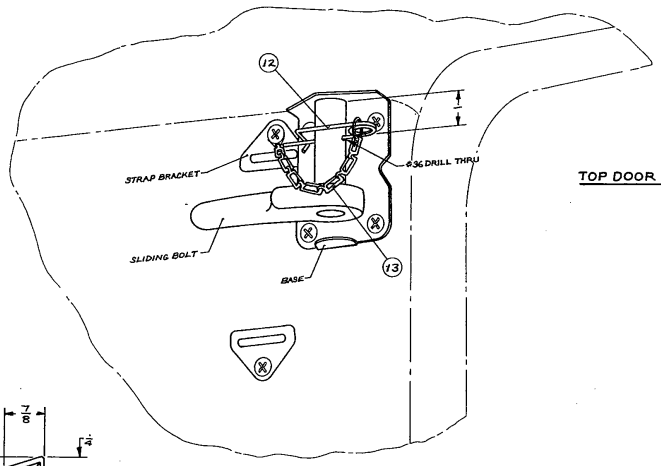

TOP DOOR LOCK DETAIL

TO PREVENT INADVERTENT CARGO DOOR OPENINGS SAFETY PINS MUST BE INSTALLED THRU THE EXHISTING SLIDING BOLT LOCKS.

PROCEDURE:

1. CLOSE DOOR AND ENGAGE BOTH TOP AND BOTTOM LOCK SECURELY.
2. DRILL HOLE, WITH # 36 DRILL, FRONT TO REAR, ONE INCH FROM BASE ON BOTH TOP AND BOTTOM LOCKS. HOLE MUST PASS THRU CENTER OF LOCK SUPPORT ASSEMBLY AND BOLT.
3. ATTACH A SHORT LENGTH OF WELDLESS SASH CHAIN TO MOUNTING SCREW ON STRAP BRACKET NEAREST TO EACH LOCK BASE.
4. ATTACH AN416-1 PIN TO EACH CHAIN WITH SPLIT RING AND INSERT PIN THRU DRILLED HOLE IN EACH LOCK ASSEMBLY.
5. TAPE BOTH TOP AND BOTTOM LOCK ASSEMBLIES TO ENSURE THAT NO PROJECTIONS EXHIST WHICH MIGHT OBSTRUCT SMOKEJUMPER OR PARACARGO EXITS FROM THE FORWARD DOOR.

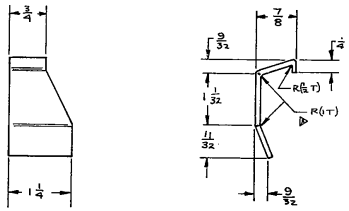

④ ANCHOR CLIP

This is a REDUCED PRINT

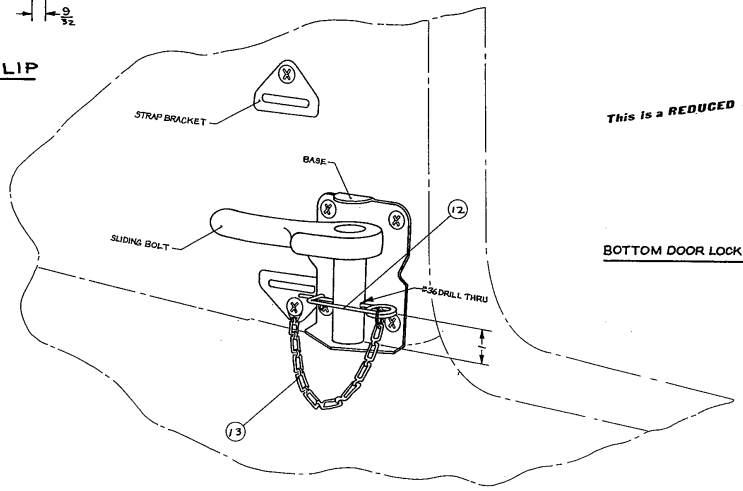

BOTTOM DOOR LOCK DETAIL

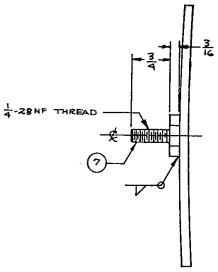

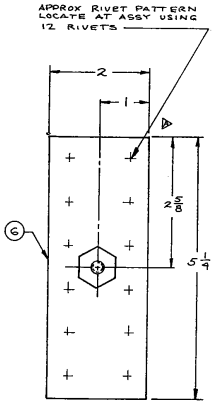

⑤ BULKHEAD PLATE

UNLESS OTHERWISE SPECIFIED	DATE	REVISION	BY
TOLERANCES: FRACTIONS ± 1/16, DECIMALS ±, ANGLES ± 2°	U.S. DEPT. OF AGRICULTURE FOREST SERVICE EQUIPMENT DEVELOPMENT CENTER MISSOULA, MONTANA		
DIMENSIONS ARE IN INCHES. BREAK SHARP EDGES			
DRAWN W A KILROY	TITLE SMOKEJUMPER EQUIPMENT FOR TWIN OTTER A/C DOOR LOCK SAFETY PIN		
DESIGNED			
CHECKED			
APPROVED			
SCALE NONE			
DATE 11-84	SHEET 2 OF 3	MEDC-784	A

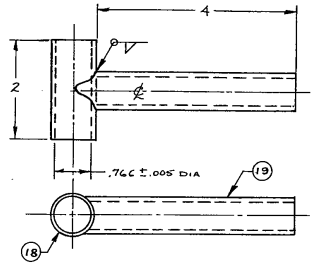

(17) SWIVEL TUBE

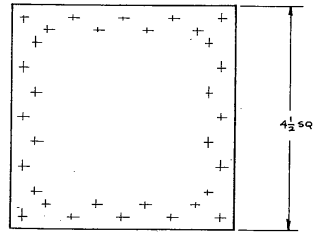

(26) DOUBLER

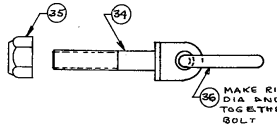

(33) RING BOLT

MATERIALS LIST				
NO	PART NAME	REQD	MATERIAL-DESCRIPTION	SHEET
14	HAND RAIL	1	PARTS 15-32	
15	TUBING	1	¾ OD X .095 SAE 1026 DOM HYD STL TUBE	
16	MOUNT TUBE	1		
17	SWIVEL TUBE	1	PARTS 18-19	
18	SLIP TUBE	1	⅞ OD X .059 SAE 1026 DOM STL TUBE	
19	MOUNT TUBE	1	¾ OD X .095 SAE 1026 DOM HYD STL TUBE	
20	CENTER MOUNT	1	PARTS 21-22	
21	PLATE	1	⅛ THICK X 2 X 3 SAE M1020 HR STL STRIP	
22	TUBE	1	⅞ OD X .059 SAE 1026 DOM STL TUBE	
23	FWD MOUNT	1	PARTS 24-25	
24	PLATE	1	⅛ THICK X 2 X 3 SAE M1020 HR STL STRIP	
25	TUBE	1	⅞ OD X .059 SAE 1026 DOM STL TUBE	
26	DOUBLERS	2	.050 THICK 2024-T3 ALUM SHEET	
27	PLATE	1	⅛ X 1½ X 3 LG SAE M1020 HR STL STRIP	
28	WASHER	4	2 OD X ⅜ ID X 1/16 T, SAE M1020 HR STL WASHER	
29	BOLT	1	5/16-24NF AN5	
30	BOLT	10	AN3-3A	
31	WASHER	10	AN960-10L	
32	NUT	10	MS20365-1032 FIBERLOCK	
33	RING BOLT	1	PARTS 34-36	
34	BOLT	1	AN46 L4 AS REQD	
35	NUT	1	MS20365-624 FIBER LOCK	
36	RING	1	⅛ DIA STEEL ROD SAE 1020 CR	

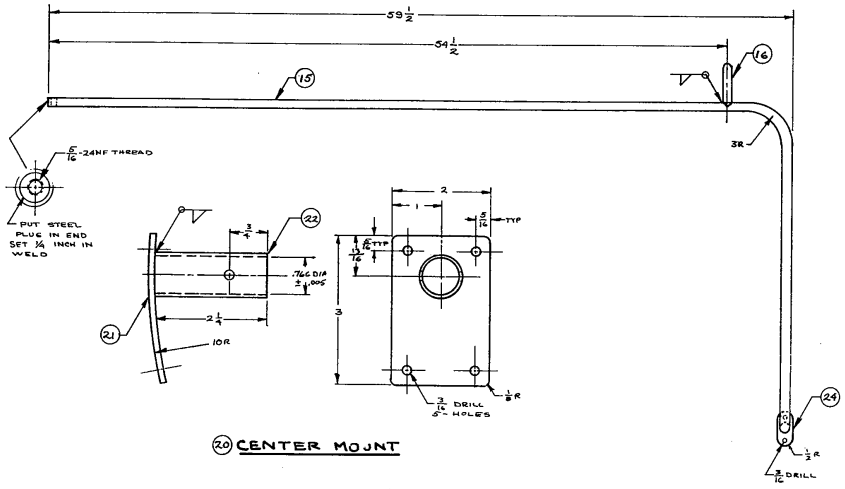

(20) CENTER MOUNT

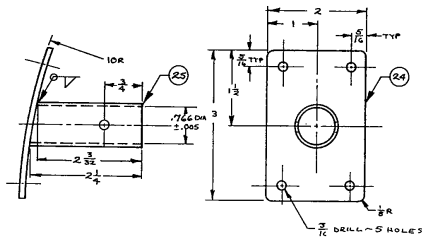

(23) FWD MOUNT

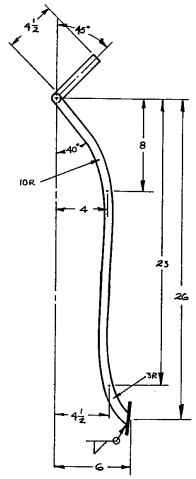

RAIL

QUARTER SCALE

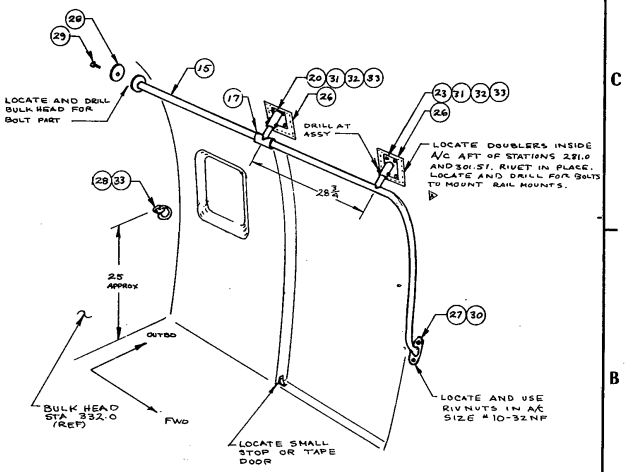

LOCATE HANDRAIL 1½ INCHES FROM INTERIOR LINING.

(14) HANDRAIL

This is a REDUCED PRINT

UNLESS OTHERWISE SPECIFIED TOLERANCES: FRACTIONS ± 1/16, DECIMALS ± .005, ANGLES ± 2°. DIMENSIONS ARE IN INCHES. BREAK SHARP EDGES	DATE	REVISION	BY
	U.S. DEPT. OF AGRICULTURE FOREST SERVICE EQUIPMENT DEVELOPMENT CENTER MISSOULA, MONTANA		
DRAWN LASSILA	TITLE		
DESIGNED TIETZ	SMOKEJUMPER EQUIPMENT FOR TWIN OTTER		
CHECKED			
APPROVED			
SCALE FULL & NOTED			
DATE APRIL 1982	SHEET 3 OF 3	MEDC-784 A	

AFT TRACK SEGMENT FOR TWIN OTTER

FOR USE WITH SMOKEJUMPER RESTRAINT SYSTEM

MATERIALS LIST

NO	PART NAME	REQD	MATERIAL-DESCRIPTION	SHEET
1	TRACK SEGMENT	1	SERIES L/34030-3 TRACK	
2	ANCHOR NUT	3	MS 21078-4 OR EQUIVILENT NUT PLATE	
3	FLAT HEAD STRUCTURAL MACHINE SCREW	3	1/4-28 x 21/32 MS 24694-5100 (AN 509R-416R13)	

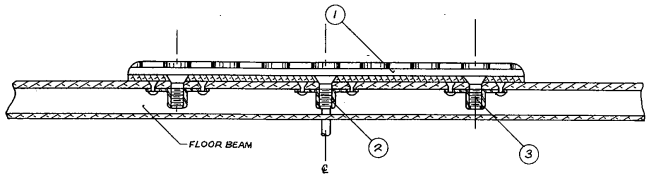

SECTION BB
WITH ALL HARDWARE INSTALLED
FULL SCALE

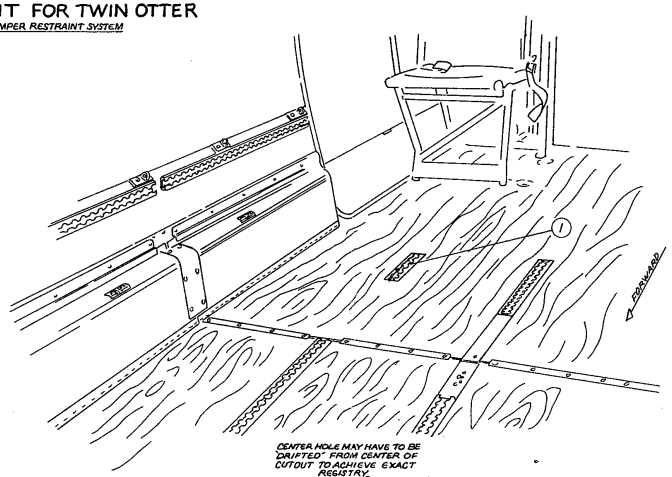

CENTER HOLE MAY HAVE TO BE "DRIFTED" FROM CENTER OF CUTOUT TO ACHIEVE EXACT REGISTRY. SEE NOTE 3

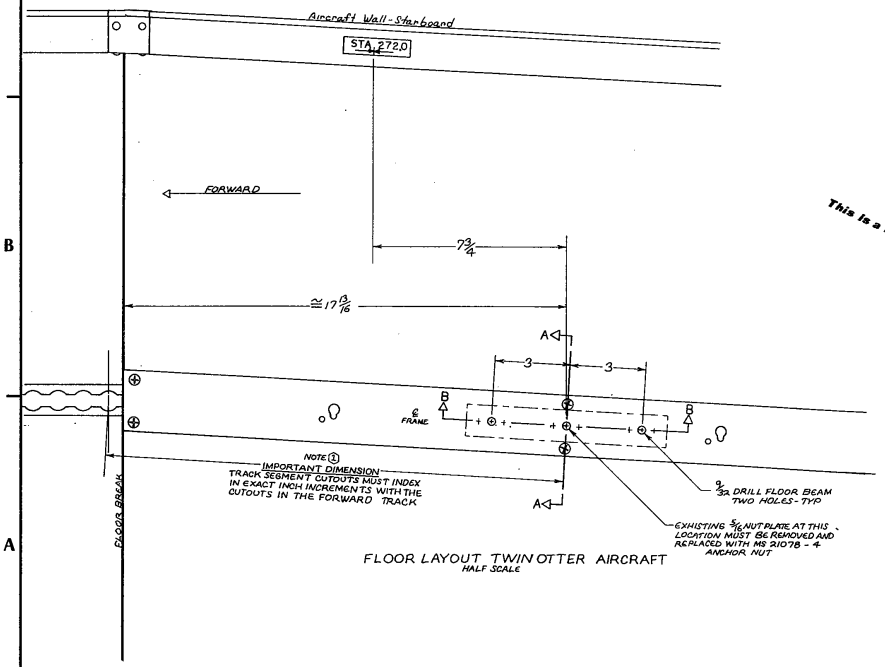

FLOOR LAYOUT TWIN OTTER AIRCRAFT
HALF SCALE

This is a REDUCED PRINT.

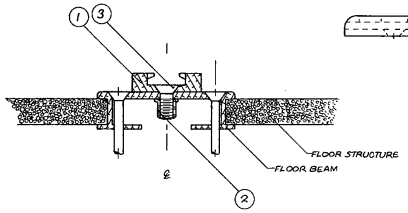

SECTION AA
WITH ALL HARDWARE INSTALLED
FULL SCALE

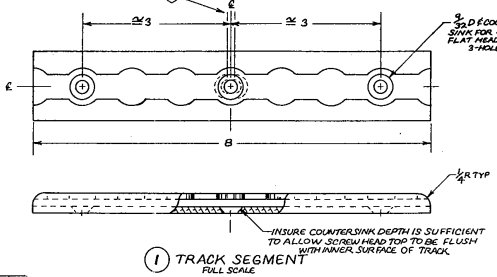

1 TRACK SEGMENT
FULL SCALE

UNLESS OTHERWISE SPECIFIED	DATE	REVISION	BY
TOLERANCES: FRACTIONS ± ___ DECIMALS ± ___ ANGLES ± ___ DIMENSIONS ARE IN INCHES BREAK SHARP EDGES	U.S. DEPT. OF AGRICULTURE FOREST SERVICE EQUIPMENT DEVELOPMENT CENTER MISSOULA, MONTANA		
DRAWN W KILROY	TITLE AFT TRACK SEGMENT FOR TWIN OTTER SMOKEJUMPER RESTRAINT SYSTEM		
DESIGNED STAN McGROW			
CHECKED			
APPROVED			
SCALE NOTED			
DATE 5/87	SHEET 1 OF 1	MEDC- 805	

United States of America

Department of Transportation—Federal Aviation Administration

Supplemental Type Certificate

Number SA1615NM

This certificate, issued to U. S. Forest Service

certifies that the change in the type design for the following product with the limitations and conditions therefor as specified hereon meets the airworthiness requirements of Part 3 *of the* Civil Air *Regulations.*

Original Product—Type Certificate Number: A9EA

Make: deHavilland

Model: DHC-6 Series

Description of Type Design Change: Installation of a parachute static line anchor cable in accordance with U. S. Department of Agriculture Forest Service Drawing No. MEDC-681, Sheets 1 through 3.

Limitations and Conditions: Approval of this change in type design applies to the above model aircraft only. This approval should not be extended to aircraft of this model on which other previously approved modifications are incorporated unless it is determined that the relationship between this change and any of those other previously approved modifications, including changes in type design, will introduce no adverse effect upon the airworthiness of that aircraft. A copy of this Certificate shall be maintained as part of the permanent records for the modified aircraft.

This certificate and the supporting data which is the basis for approval shall remain in effect until surrendered, suspended, revoked, or a termination date is otherwise established by the Administrator of the Federal Aviation Administration.

Date of application: April 14, 1982

Date of issuance: April 23, 1982

Date reissued:

Date amended:

By direction of the Administrator

(Signature)

Chief, Seattle Area Aircraft Certification Office, ANM-100S

(Title)

Any alteration of this certificate is punishable by a fine of not exceeding $1,000, or imprisonment not exceeding 3 years, or both.

This certificate may be transferred in accordance with FAR 21.47.

FAA Form 8110-2 (10-68)

U.S. Department
of Transportation
**Federal Aviation
Administration**

Northwest Mountain Region
Colorado, Idaho, Montana,
Oregon, Utah, Washington,
Wyoming

FAA Building
King County Int'l Airport
Seattle, Washington 98108

APR 23 1982

U. S. Forest Service
MEDC Building 1
Ft. Missoula
Missoula, Montana 59801

Gentlemen:

We have enclosed Supplemental Type Certificate No. SA1615NM, which approves the installation of a parachute static line anchor cable in accordance with U. S. Department of Agriculture Forest Service Drawing No. MEDC-681, Sheets 1 through 3 on deHavilland, Model DHC-6 Series.

The Certificate may be transferred or made available to others by means such as a licensing arrangement in accordance with FAR 21.47.

If you plan to manufacture replacement or modification parts for sale in conformance with approved data listed on the Certificate, you are required to comply with Section 21.303 of the Federal Aviation Regulations. A Parts Manufacturer Approval (PMA) may be issued under the provisions of FAR 21.303(d) when you submit a statement certifying that you have established a fabrication inspection system as required by FAR 21.303(h). The identification requirements for parts produced under a PMA are in FAR Part 45, Section 45.15. Your statement may be in letter form, with a reference to the STC number, and should be addressed to: Federal Aviation Administration, FAA Building, Boeing Field, Seattle, Washington 98108, Attention: Chief, Manufacturing Inspection Branch, ANM-180S.

Sincerely,

Don C. Jacobsen
Chief, Seattle Area Aircraft
Certification Office, ANM-100S

Enclosure

RECEIVED
APR 23 1982
MEDC

United States Department of Agriculture

Forest Service MEDC

Reply to 7120 Equipment Development & Test

Date APR 27 1992

Subject ED&T 1440 - Pull Test on Horizontal Cable of DH Twin Otter

To Arthur H. Jukkala, Staff Assistant, MEDC

This letter will report the pull test performed on the horizontal anchor cable for the DH Twin Otter that was performed at Aerodyne in Renton, Washington on April 14.

The cable was made according to MEDC's drawings and installed by Aerodyne mechanics on April 12 and 13. Chub Riggleman and I performed the test on April 14, while representatives from the Seattle office of the FAA, Frank LeBrash and Mike DelFiano observed. We used four T-10 static lines to pull on the static-line anchor cable. We used a large come-a-long to apply the pull. Two Chatillon crane scales were used to measure the load. The gauges were calibrated in Missoula before the test on an Instron Machine and calibrated immediately after the test against a Cox and Stevens Electric Weighing unit, Model ES-4-.

Before the test, and after each pull, measurements were made as shown in Figure 1, to determine if any permanent deformation was occurring. The nominal value of the first pull was 500 pounds. The plan was to increase the pull in increments until 3500 pounds, or failure, whichever came first. As it turned out, failure occurred within a few seconds after reaching 3500 pounds. The pre- and post-test calibrations are listed in Figure 2. The factors at 3000 to 3500 pounds ranged from .9901 to 1.026. We decided to assume that the correct factor is 1.000. If it is really .9901, we will overestimate the load by less than one percent. If it is really 1.026, we will underestimate the load by almost three percent. Inspection of Figure 2 indicates that we are more likely to underestimate the load if we use 1.0 then we are to overestimate the load.

The results of the tests are summarized in Figure 3. As can be seen, we reached our target of 3500 pounds before breakage and there was no permanent deformation at all, so the cable can probably be certified for 2333 pounds.

The only change I plan to make in this anchor cable is to specify that there be 6 inches of slack in the cable when it is installed, rather than 4 inches. The anchor cable will be stronger when so adjusted. I recommend that this cable be installed in all Twin Otter aircraft used by the U.S. Forest Service.

JOHN G. TIETZ
Project Leader

Enclosure

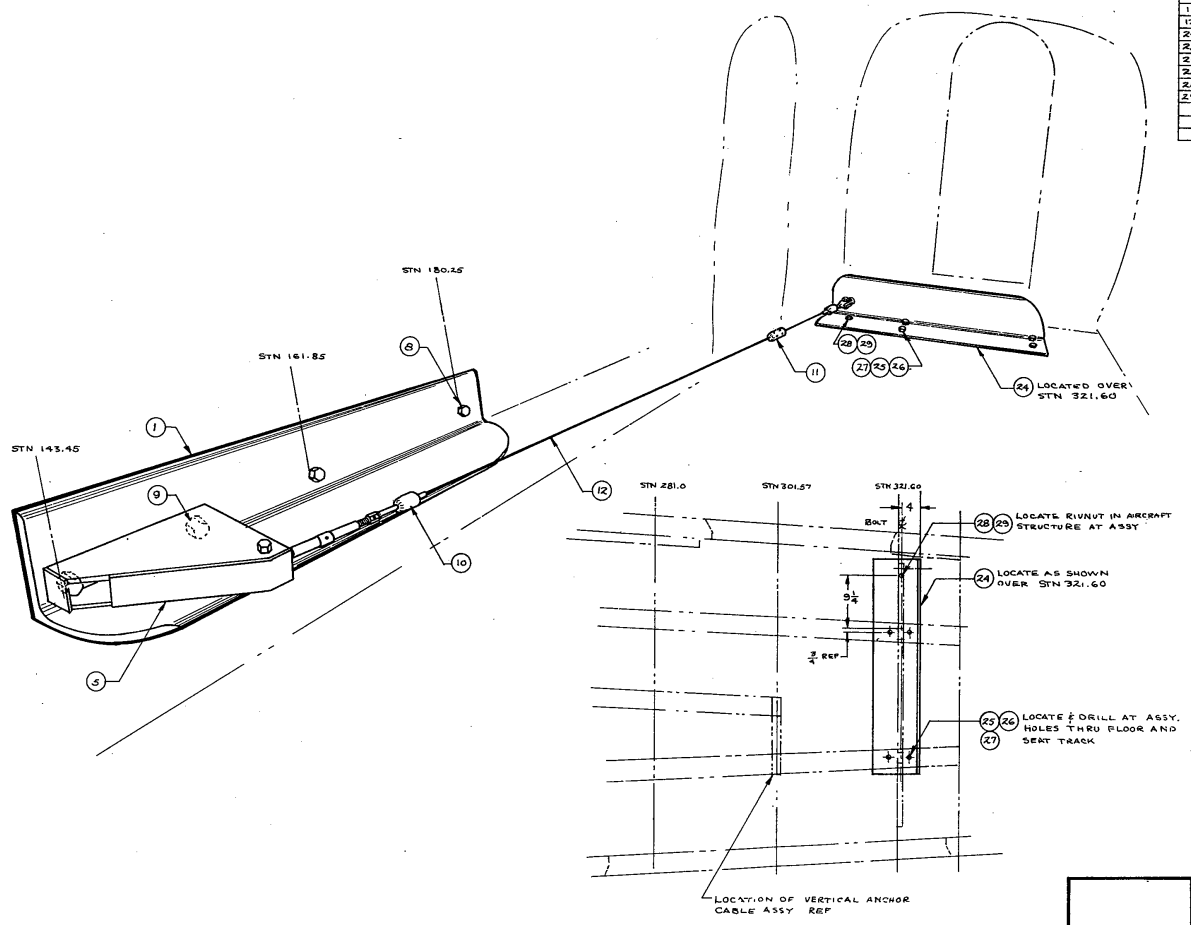

MATERIALS LIST

NO.	PART NAME	REQD	MATERIAL-DESCRIPTION	SHEET
1	FWD ANCHOR	1	PART 2-4	2
5	ANCHOR BRACKET	1	PART 6-7	3
8	BOLT	3	AN5-11A	
9	BOLT	1	AN6-12A	
10	END STOP	2	PART 10	3
11	STOP	1	PART 11	3
12	CABLE ASSY	1	PARTS 13-23 + 10,11	3
24	REAR ANCHOR	1	PART 24	2
25	BOLT	4	AN7-15A	
26	NUT	4	MS21078-7	
27	RIVETS	4	5/32 DIA	
28	BOLT	1	AN4-13A	
29	RIV NUT	1	B.F. GOODRICH FLAT HD 1/4-28UNP	

NOTES:

1. LOCATE STOP AS REQUIRED FOR STATIC LINE USES AND PLACEMENT
2. CABLE ASSY SHALL BE INSTALLED WITH 4-INCHES OF SLACK MEASURED IN THE EXTREME SPREAD.

This is a REDUCED PRINT, full size print available upon request.

UNLESS OTHERWISE SPECIFIED
TOLERANCES:
FRACTIONS ± ____
DECIMALS ± ____
ANGLES ± ____
DIMENSIONS ARE IN INCHES
BREAK SHARP EDGES

DATE	REVISION	BY

U.S. DEPT. OF AGRICULTURE
FOREST SERVICE
EQUIPMENT DEVELOPMENT CENTER
MISSOULA, MONTANA

DRAWN LASSILA
DESIGNED TIETZ
CHECKED TIETZ
APPROVED
SCALE NONE
DATE MAY 1981

TITLE
ANCHOR CABLE, HORIZONTAL, TWIN OTTER

SHEET 1 OF 3

MEDC-681

MATERIALS LIST				
NO	PART NAME	REQD	MATERIAL-DESCRIPTION	SHEET
1	FWD ANCHOR	1	PARTS 2-4	
2	ANGLE	1	4 X 4 X 1/2 X 40LG 6061-T6 ALUM ANGLE	
3	NUT	1	MS 21078-6	
4	RIVET	2	1/8 DIA	
24	REAR ANCHOR	1	8 X 8 X 1/2 X 36 LG 6061-T6 ALUM ANGLE	

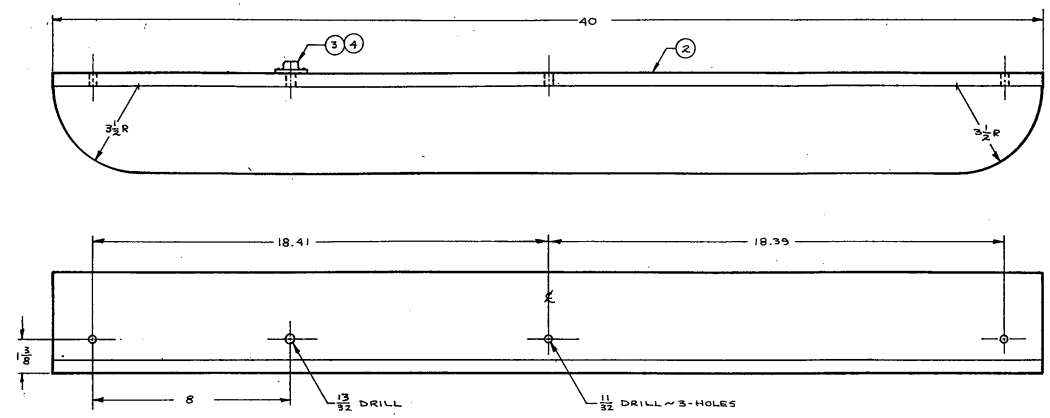

① FWD ANCHOR

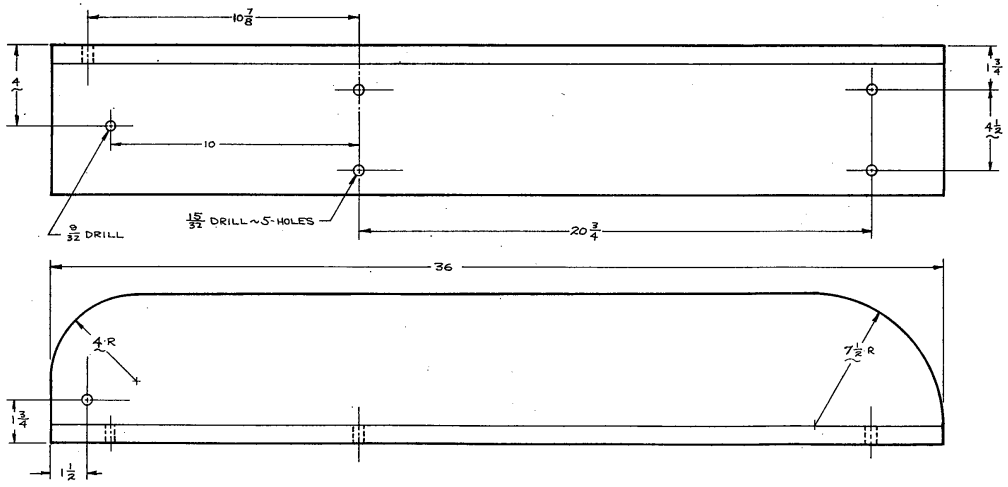

㉔ REAR ANCHOR

ANGLE NOT SHOWN TO SCALE

This is a REDUCED PRINT, full size print available upon request.

UNLESS OTHERWISE SPECIFIED	DATE	REVISION	BY
TOLERANCES: FRACTIONS ± 1/32, DECIMALS ± .01, ANGLES ± —	U.S. DEPT. OF AGRICULTURE FOREST SERVICE EQUIPMENT DEVELOPMENT CENTER MISSOULA, MONTANA		
DIMENSIONS ARE IN INCHES. BREAK SHARP EDGES			
DRAWN LASSILA	TITLE ANCHOR CABLE, HORIZONTAL, TWIN OTTER		
DESIGNED J TIETZ			
CHECKED TIETZ			
APPROVED			
SCALE HALF			
DATE MAY 1981	SHEET 2 OF 3	MEDC-681	

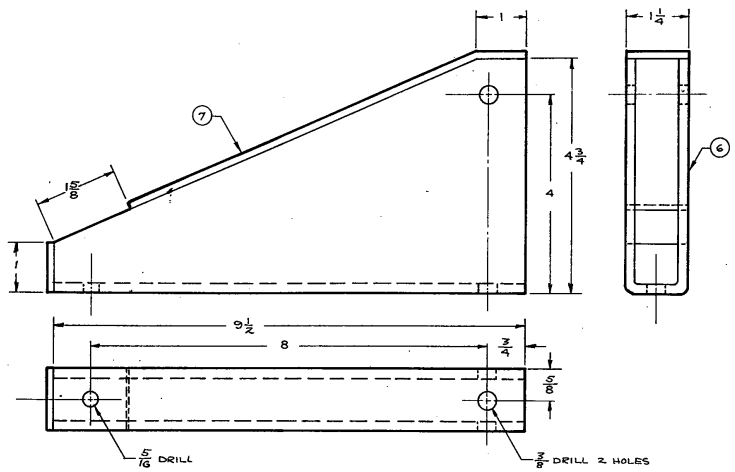

⑤ ANCHOR BRACKET
WELDED CONSTRUCTION

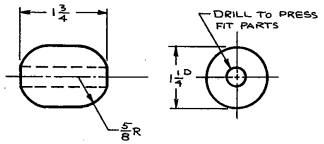

⑩ END STOP

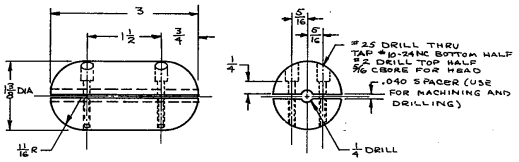

⑪ STOP

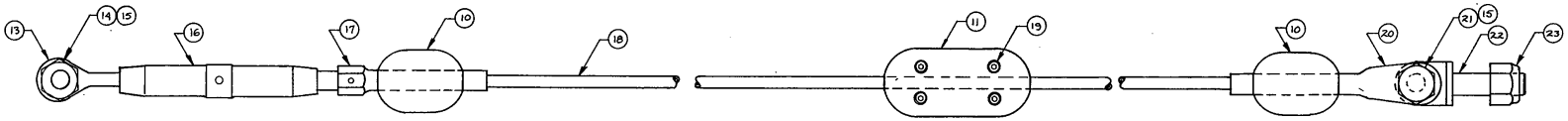

⑫ CABLE ASSY

This is a REDUCED PRINT, full size print available upon request.

MATERIALS LIST

NO	PART NAME	REQD	MATERIAL-DESCRIPTION	SHEET
5	ANCHOR BRACKET	1	PARTS 6-7	
6	ANCHOR	1	3/16 THICK 4130 CR STEEL SHEET	
7	TIE STRIP	2	1/8 X 1 1/4 4130 CR STEEL STRIP	
10	END STOP	2	1 1/4 DIA X 1 3/4 LG 6061-T6 ALUM ROUND	
11	STOP	2	3/4 X 1 1/2 X 3 LG 6061-T6 ALUM FLAT	
12	CABLE ASSY	1	PARTS 13-23 #10,11	
13	EYE END TERM	1	MS 21254-8LL	
14	BOLT	1	AN6-16A	
15	NUT	2	MS 20365-624	
16	TURNBUCKLE	1	MS 21251-8L	
17	TERM STUD	1	MS 21259-8RH	
10	END STOP	2	PART 10	
18	CABLE	AR	1/4 DIA 7X19 AIRCRAFT CABLE	
11	STOP	1	PART 11	
19	SCREWS	4	#10-24NC SOCKET HD CAP SCREWS x 3/4 LG	
20	TERM. FORK	1	MS 20667-8	
21	BOLT	1	AN6-12A	
22	BOLT EYE	1	AN47-11	
23	NUT	1	MS 20365-720	

UNLESS OTHERWISE SPECIFIED
TOLERANCES:
FRACTIONS ± 1/32
DECIMALS ± —
ANGLES ± —
DIMENSIONS ARE IN INCHES
BREAK SHARP EDGES

DATE	REVISION	BY

U.S. DEPT. OF AGRICULTURE
FOREST SERVICE
EQUIPMENT DEVELOPMENT CENTER
MISSOULA, MONTANA

DRAWN LASSILA
DESIGNED TIETZ
CHECKED TIETZ
APPROVED
SCALE FULL
DATE MAY 1981

TITLE
ANCHOR CABLE, HORIZONTAL, TWIN OTTER

SHEET 3 OF 3

MEDC-681