SIKORSKY

EMERGENCY SHUTDOWN PROCEDURE

S-58T

1. THROTTLE TWIST GRIP—OFF (CONTROL STICK RIGHT OF CENTER CONSOLE)
2. FUEL SHUTOFF VALVE SWITCHES—CLOSED (CENTER CONSOLE)
3. FUEL BOOST PUMP SWITCHES—OFF (CENTER CONSOLE)
4. BATTERY & GENERATOR SWITCHES—OFF (CENTER CONSOLE)
5. ROTOR BRAKE—ON IF ROTOR BLADES ARE TURNING (RIGHT OF OVERHEAD SWITCH PANEL) RED HANDLE—PULL DOWN & FORWARD

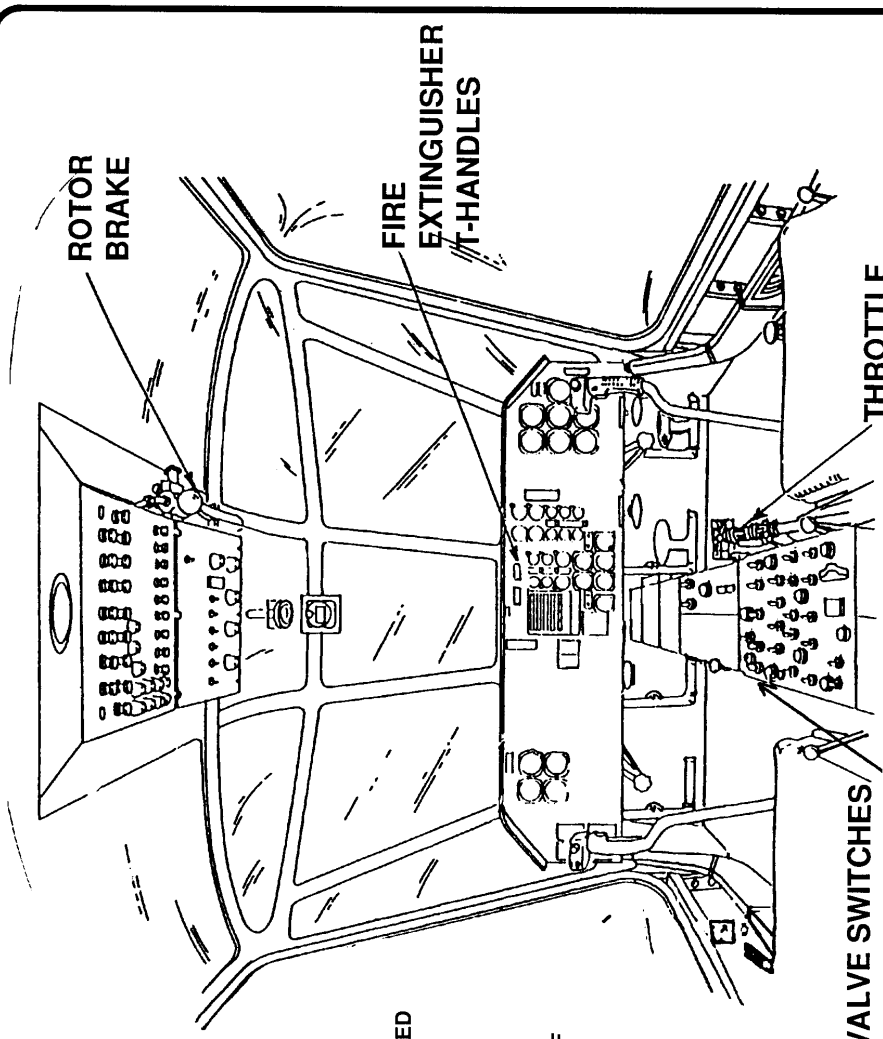

Exhibit M-26: Sikorsky S-61N

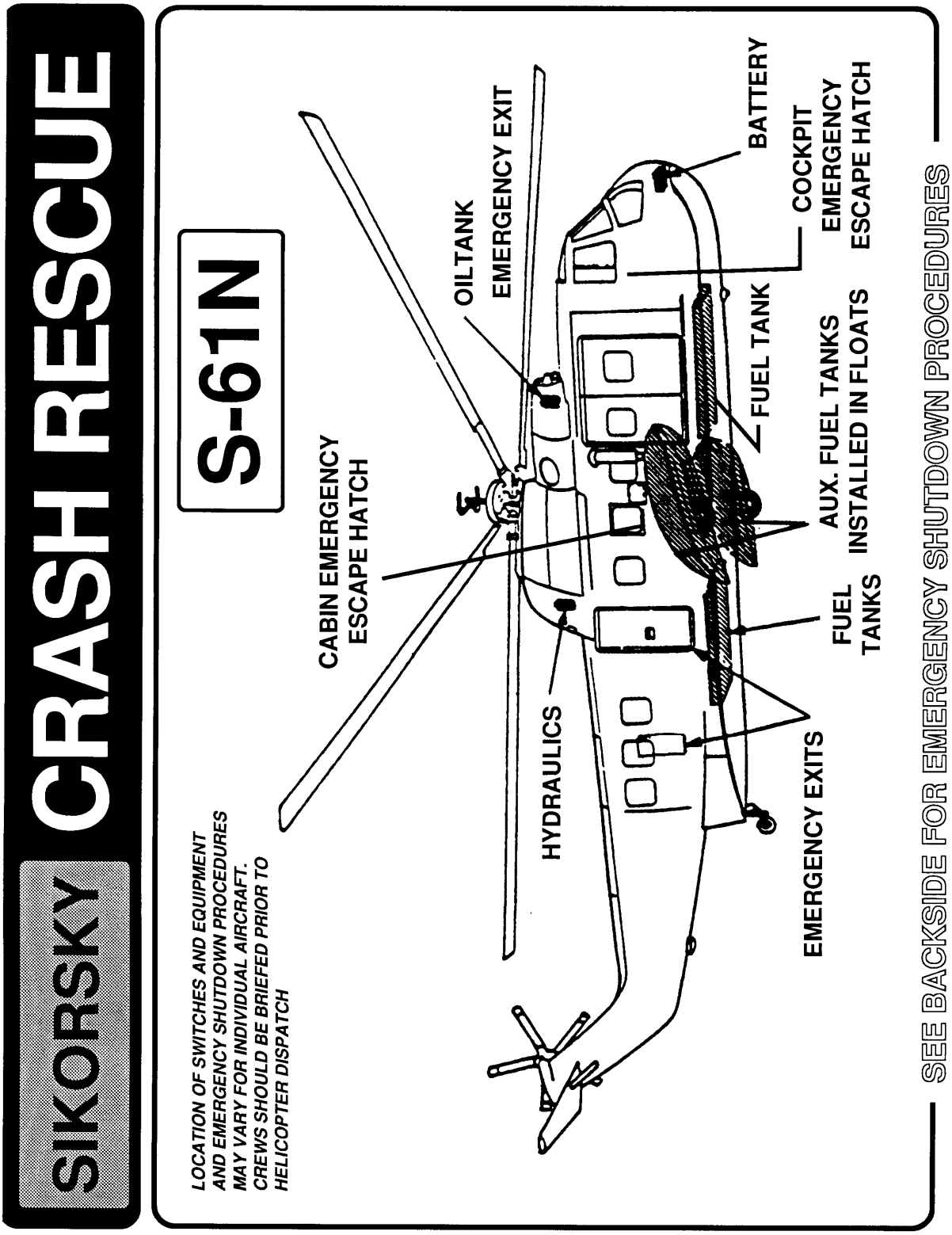

SIKORSKY

ENGINE SHUTDOWN & AIRCREW EXTRACTION

S-61N

1. ENGINE CONTROL LEVERS—OFF (CENTER OVERHEAD—FORWARD) PULL AFT, THEN DOWN TO CLEAR DETENT AT END OF ARC.
2. FUEL SHUT OFF VALVE SWITCHES—CLOSED (CENTER OF INSTRUMENT PANEL)
3. FUEL BOOST PUMP SWITCHES—OFF (CENTER OF INSTRUMENT PANEL)
4. BATTERY & GENERATOR SWITCHES—OFF (OVERHEAD SWITCH PANEL)
5. ROTOR BRAKE—ON IF ROTOR BLADES ARE TURNING (RIGHT OF OVERHEAD SWITCH PANEL) RED HANDLE—PULL DOWN & FORWARD.

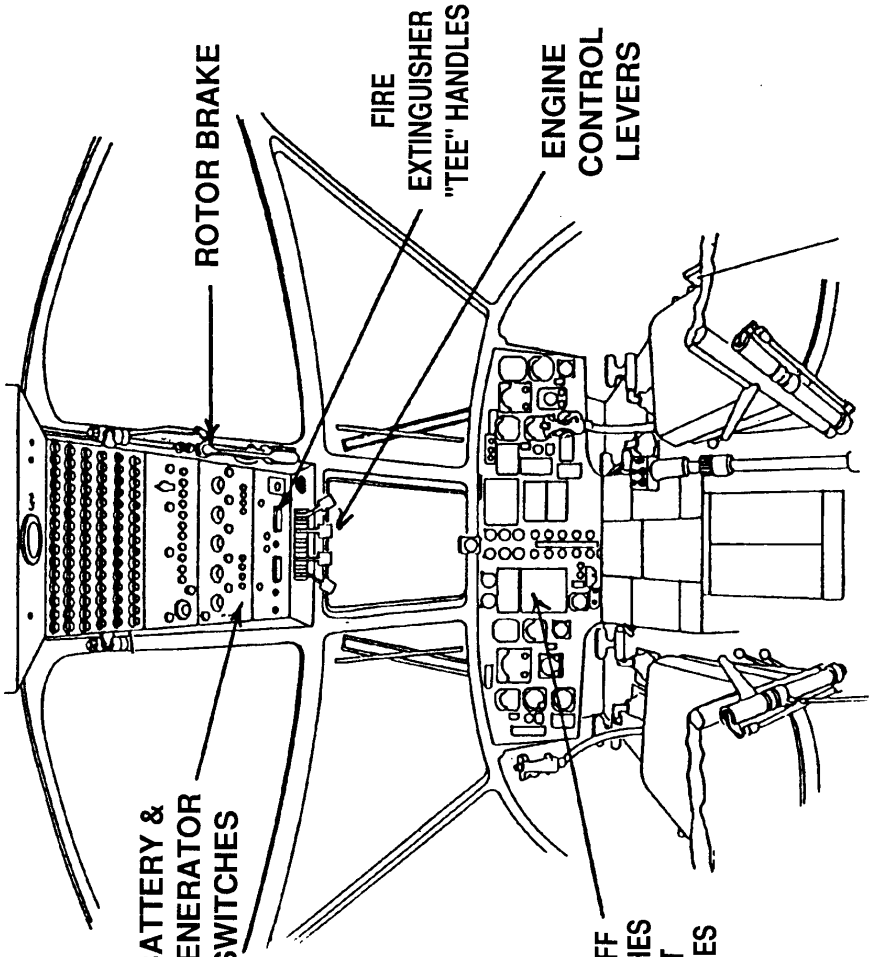

SIKORSKY CRASH RESCUE

S-64 (CH-54)

LOCATION OF SWITCHES AND EQUIPMENT AND EMERGENCY SHUTDOWN PROCEDURES MAY VARY FOR INDIVIDUAL AIRCRAFT. CREWS SHOULD BE BRIEFED PRIOR TO HELICOPTER DISPATCH.

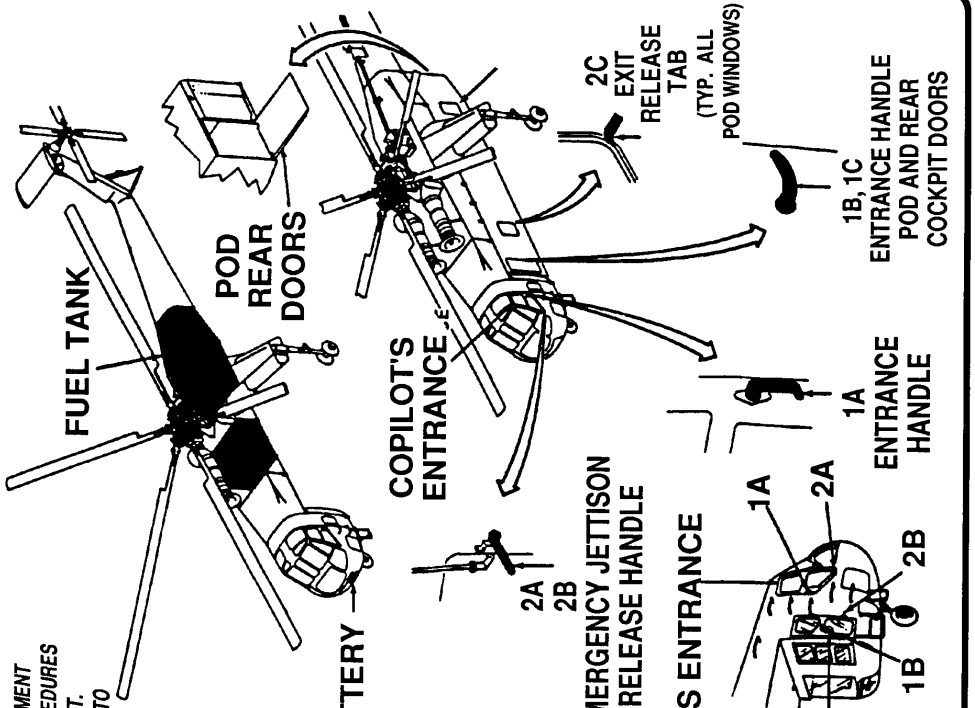

1. NORMAL ENTRY
   - A. ROTATE ENTRANCE HANDLE, LOCATED ON AFT EDGE OF PILOT'S AND COPILOT'S ENTRANCE DOOR, SWING DOOR OUT.
   - B. ROTATE ENTRANCE HANDLE, LOCATED ON AFT EDGE OF REAR COCKPIT ENTRANCE DOOR ON RIGHT SIDE OF CREW COMPARTMENT, SWING DOOR OUT.
   - C. ROTATE ENTANCE HANDLE, LOCATED ON AFT EDGE OF POD ACCESS DOORS, SWING DOOR OUT.
2. EMERGENCY ENTRY
   - A. ROTATE ENERGENCY JETTISON RELEASE HANDLE, LOCATED AT FORWARD LOWER CORNER OF PILOT'S AND COPILOT'S ENTRANCE DOOR, PULL DOOR OUT.
   - B. ROTATE ENERGENCY JETTISON RELEASE HANDLE, LOCATED AT FORWARD LOWER CORNER OF REAR COCKPIT ENTRANCE DOOR ON RIGHT SIDE OF CREW COMPARTMENT, PULL DOOR OUT.
   - C. PULL EXIT RELEASE TAB, LOCATED LOWER AFT CORNER OF EACH POD WINDOW, OUT AND REMOVE WINDOW.
3. CUT-IN
   - A. CUT AROUND WINDOWS AND ACCESS DOORS OF POD AS MARKED.

SIKORSKY CRASH RESCUE

S-70 (UH-60A)

LOCATION OF SWITCHES AND EQUIPMENT AND EMERGENCY SHUTDOWN PROCEDURES MAY VARY FOR INDIVIDUAL AIRCRAFT. CREWS SHOULD BE BRIEFED PRIOR TO HELICOPTER DISPATCH.

AIRCRAFT ENTRY—ALL MODELS

1. NORMAL ENTRY
   A. TURN COCKPIT DOOR COUNTERCLOCKWISE TO THE OPEN POSITION TO OPEN DOOR.
   B. TURN CABIN DOOR COUNTERCLOCKWISE TO THE OPEN POSITION AND SLIDE DOOR AFT.
2. EMERGENCY ENTRY
   A. BREAK WINDOW IN COCKPIT DOOR AND PULL JETTISON LEVER AFT TO RELEASE DOOR HINGES.
   B. BREAK WINDOW IN CABIN DOOR AND ROTATE EMERGENCY HANDLE, LOCATED BELOW EACH WINDOW, TO THE AFT OPEN POSITION. ROTATE BOTTOM OF WINDOW OUT TO REMOVE WINDOW.

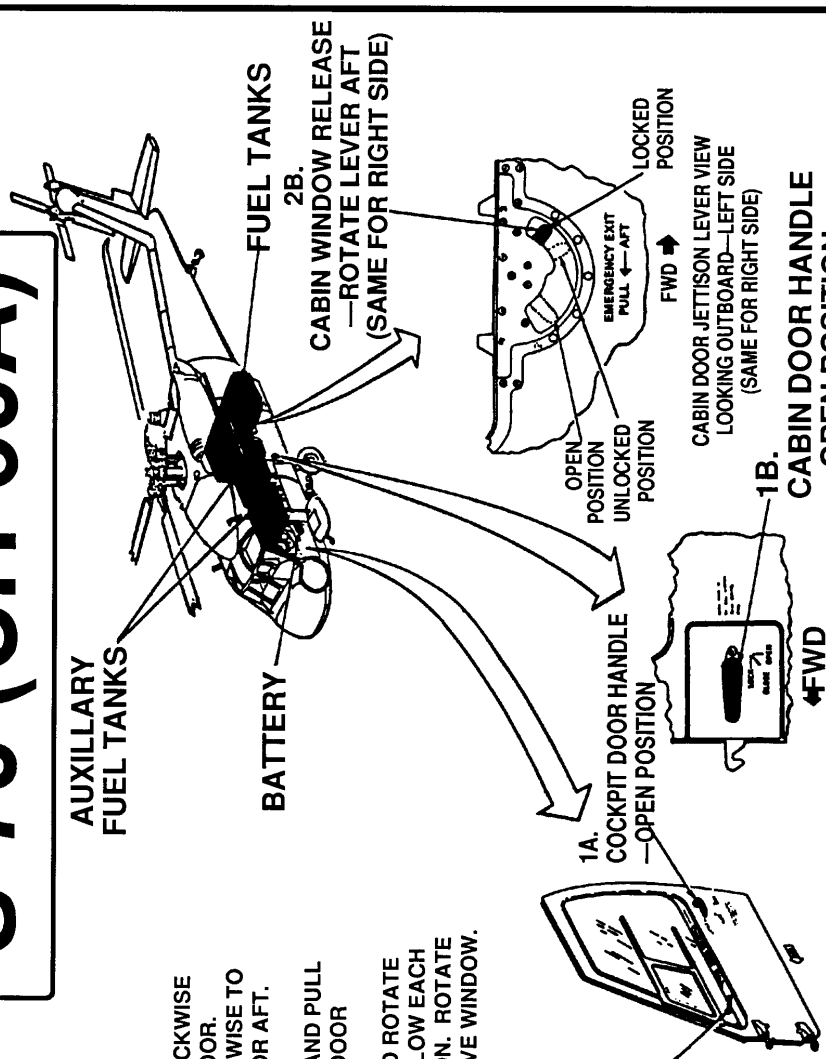

SEE BACK SIDE FOR EMERGENCY SHUTDOWN PROCEDURES

SIKORSKY

ENGINE SHUTDOWN & AIRCREW EXTRACTION

S-70 (UH-60A)

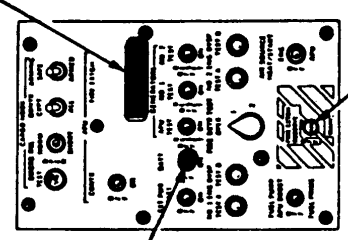

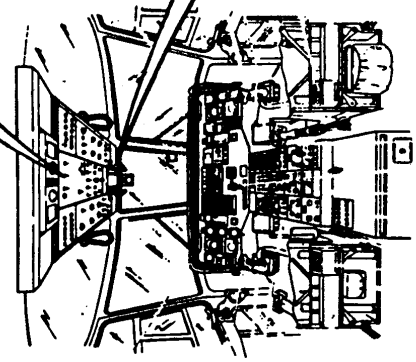

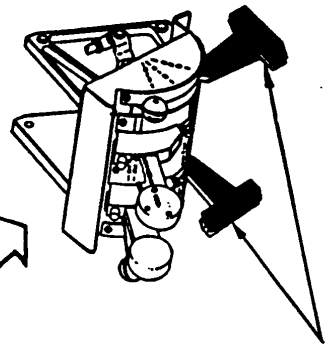

1. **ENGINE SHUTDOWN**
   NOTE: TO ACTIVATE THE INSTALLED FIRE EXTINGUISHING SYSTEM, ONE (T) HANDLE MUST BE PULLED. AGENT IS DISCHARGED TO LAST (T) HANDLE PULLED. THEN REPOSITION THE FIRE EXTINGUISHER SWITCH FROM OFF TO MAIN OR RESERVE. BATTERY SWITCH MUST BE IN THE ON POSITION.
   A. **PULL ENGINE EMERGENCY (T) HANDLES, LOCATED ON CONTROL QUADRANT, FULL AFT.**
   B. **PULL APU (T) HANDLE LOCATED ON UPPER CONSOLE, DOWN.**
   C. **PLACE BATTERY SWITCH, LOCATED ON UPPER CONSOLE, TO THE OFF POSITION.**
2. **AIRCREW—TROOP EXTRACTION**
   NOTE: ALL AIRCREW SEATS HAVE A COMPLETE LAP BELT AND DUAL TORSO RESTRAINT SHOULDER HARNESS ATTACHED TO A ROTARY RELEASE BUCKLE.

   ALL TROOP SEATS HAVE A LAP BELT AND SHOULDER HARNESS ATTACHED TO A ROTARY RELEASE BUCKLE.