C-23

Accessories Required For Smokejumping:

Primary Vertical Anchor:	MTDC-877 - Vertical Anchor for C-23 Strength: 2,000 pounds STC#: N.A. (C-23 is not a certified A/C)
Secondary Horizontal Anchor:	MTDC-896 - C-23 Horizontal Anchor Strength: 750 pounds STC#: N.A. (C-23 is not a certified A/C)
Handrails:	MTDC-868 - C-23 Handrails
Tailgate Gear Box:	MTDC-881 - C-23 Cargo Bin

42	BOLT	1	AN4-10A
43	BOLT	6	1/4-28NF x 1 1/2 LG SOCKET HD CAP SCREW
44	NUT	1	1/4-28NF FIBER LOCK HEX NUT

MATERIALS LIST

NO	PART NAME	REQD	MATERIAL-DESCRIPTION	SHEET
1	UPRIGHT	1	PARTS 2-12	1 & 2
2	SIDES	2	.063 THICK 2024-T3 ALUM ALLOY SHEET	
3	CHANNEL	4	AND10137-1007 2024-T3 ALUM ALLOY	
4	UPPER REINF.	2	.125 THICK 2024-T3 ALUM ALLOY SHEET	
5	BOTTOM ANGLE	2	3x1 1/4 x 1/8 THICK 2024-T3 ALUM ALLOY ANGLE	
6	RIVET	AR	MS20470 AD4-6	
7	RIVET	AR	CHERRY MAX CR3243-4-3	
8	RIVET	AR	CHERRY MAX CR3243-4-5	
9	RIVET	AR	MS20426 AD4-6	
10	RIVET	AR	MS20470 AD4-3	
11	T-NUT	3	MS21078-4 OR NAS1024N4	
12	RIVET	6	MS20426AD3-5	
13				
14	CABLE ASSY	1	PARTS 15-16	
15	CABLE	1	3/8 DIA 7x19 GALV A/C CABLE	
16	FORK	2	MS20667-12	
17	STOP	2	PARTS 18-19	
18	BODY	2	1 1/2 DIA ALUM ROUND	
19	SCREWS	8	#8-32NC x 3/4 LG SOCKET HD CAP SCREW	
20	STOP LOCK	2	1-DIA STEEL ROUND	
21	BASE	1	PARTS 22-27	3
29	BOLT	2	AN8-32A	
30	NUT	2	MS29365-820	
31	DOUBLER	1	PARTS 32-34	4
35	END BRACKET	1	PART 35	4
36	BRACKET	1	PART 36	4
37	TUBE	1	PARTS 38-39	4
40	TOP	1	PART 40	4
41	ROD END	2	A-28NF MALE ROD END BEARING	

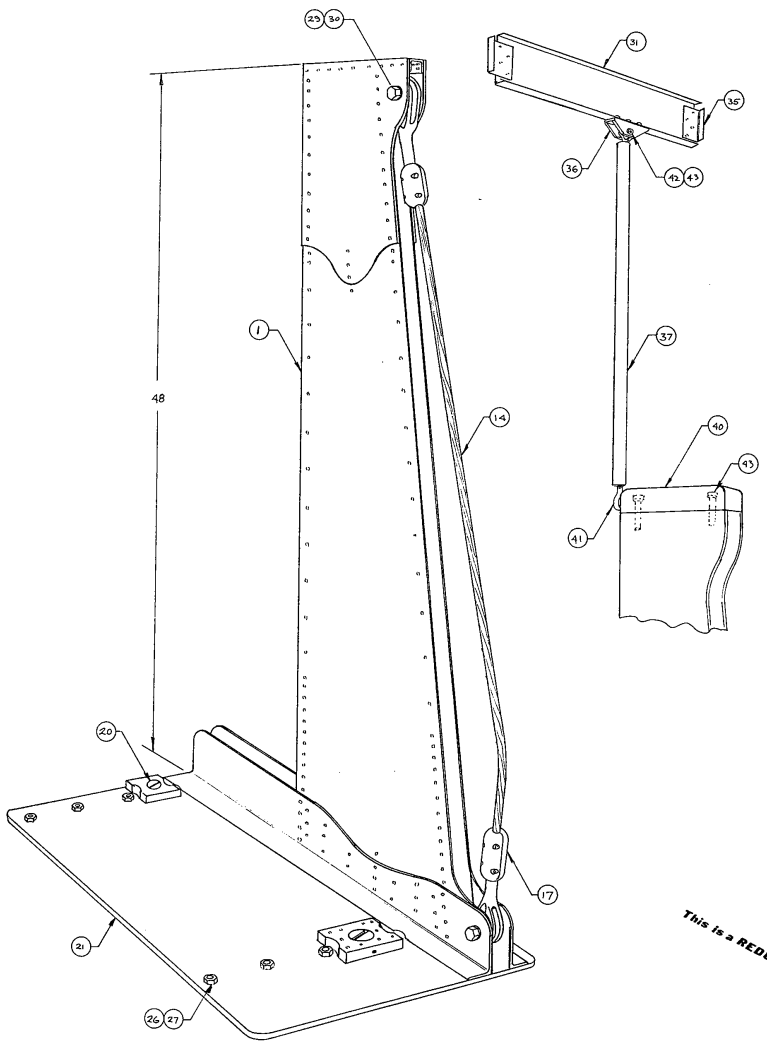

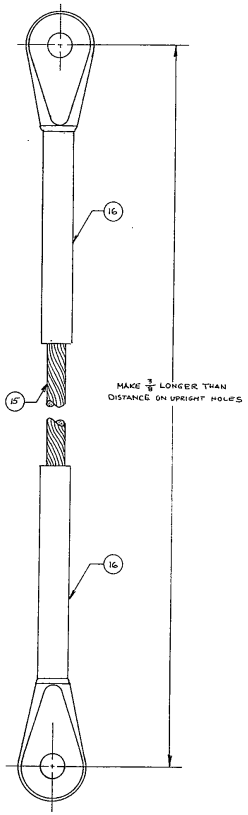

(14) CABLE ASSY

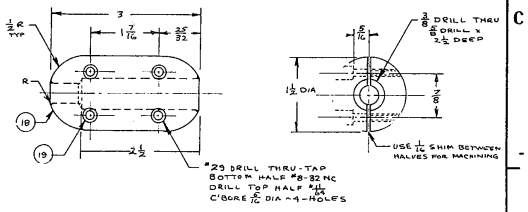

(17) STOP

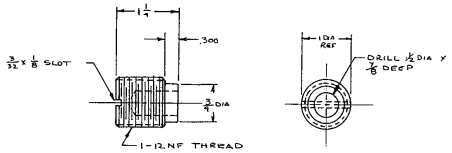

(20) STOP LOCK

This is a REDUCED PRINT

UNLESS OTHERWISE SPECIFIED
TOLERANCES:
FRACTIONS ± 1/32
DECIMALS ± .005
ANGLES ± 2°
DIMENSIONS ARE IN INCHES
BREAK SHARP EDGES

DRAWN	LASSILA
DESIGNED	LASSILA
CHECKED	
APPROVED	
SCALE	None & Full
DATE	FEB 1992

DATE	REVISION	BY

U.S. DEPT. OF AGRICULTURE
FOREST SERVICE
TECHNOLOGY & DEVELOPMENT CENTER
MISSOULA, MONTANA

TITLE
C-23 PRIMARY
VERTICAL ANCHOR CABLE

SHEET 1 OF 4 | MTDC-877

MATERIALS LIST				
NO	PART NAME	REQD	MATERIAL-DESCRIPTION	SHEET

PARTS ON SHEET 1

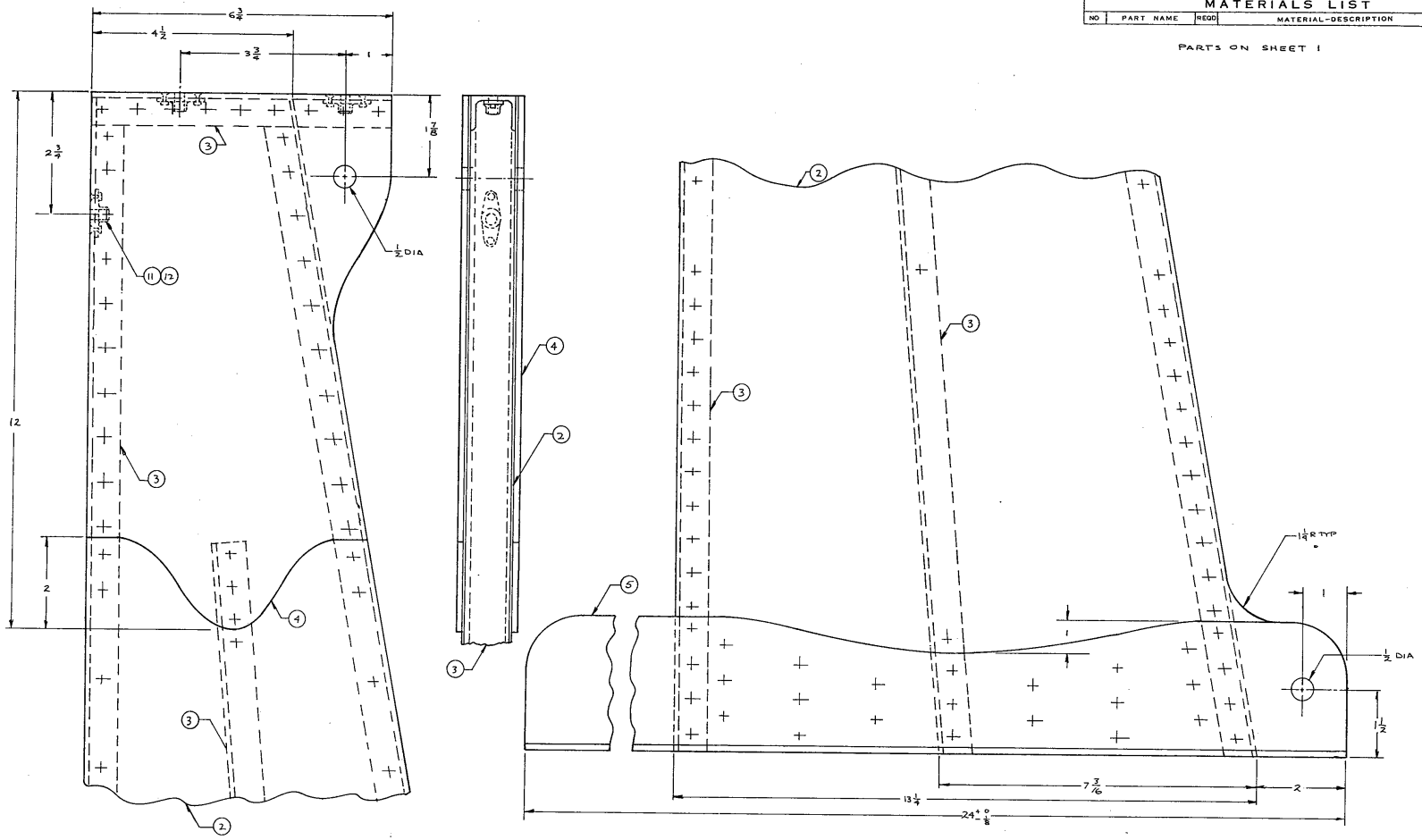

DETAIL A

USE AS PATTERN FOR UPPER REINFORCEMENT AND RIVET PATTERN.

This is a REDUCED PRINT

DETAIL B

USE AS PATTERN FOR BOTTOM ANGLE AND RIVET PATTERN.

UNLESS OTHERWISE SPECIFIED
TOLERANCES:
FRACTIONS ± 1/32
DECIMALS ± .005
ANGLES ± 1°
DIMENSIONS ARE IN INCHES
BREAK SHARP EDGES

DATE	REVISION	BY

U.S. DEPT. OF AGRICULTURE
FOREST SERVICE
TECHNOLOGY & DEVELOPMENT CENTER
MISSOULA, MONTANA

DRAWN LASSILA
DESIGNED LASSILA
CHECKED
APPROVED
SCALE FULL
DATE FEB 1992

TITLE
C-23 PRIMARY
VERTICAL ANCHOR CABLE

SHEET 2 OF 4

MTDC-877

MATERIALS LIST				
NO	PART NAME	REQD	MATERIAL-DESCRIPTION	SHEET
25	SET SCREW	2	#10-32NF SOCKET SET SCREW	
26	STUD	16	ANCRA #40214-13	
27	NUT	15	5/16-24 NF JAM NUT (MAX)	

MATERIALS LIST				
NO	PART NAME	REQD	MATERIAL-DESCRIPTION	SHEET
21	BASE	1	PARTS 22-27	
22	BASE PLATE	1	1/4 THICK 7075-T6 ALUM ALLOY PLATE	
23	PAD	4	1/4 X 2 X 2 1/2 LG 7075-T6 ALUM ALLOY PLATE	
24	RIVET	20	MS 20426AD4-16	

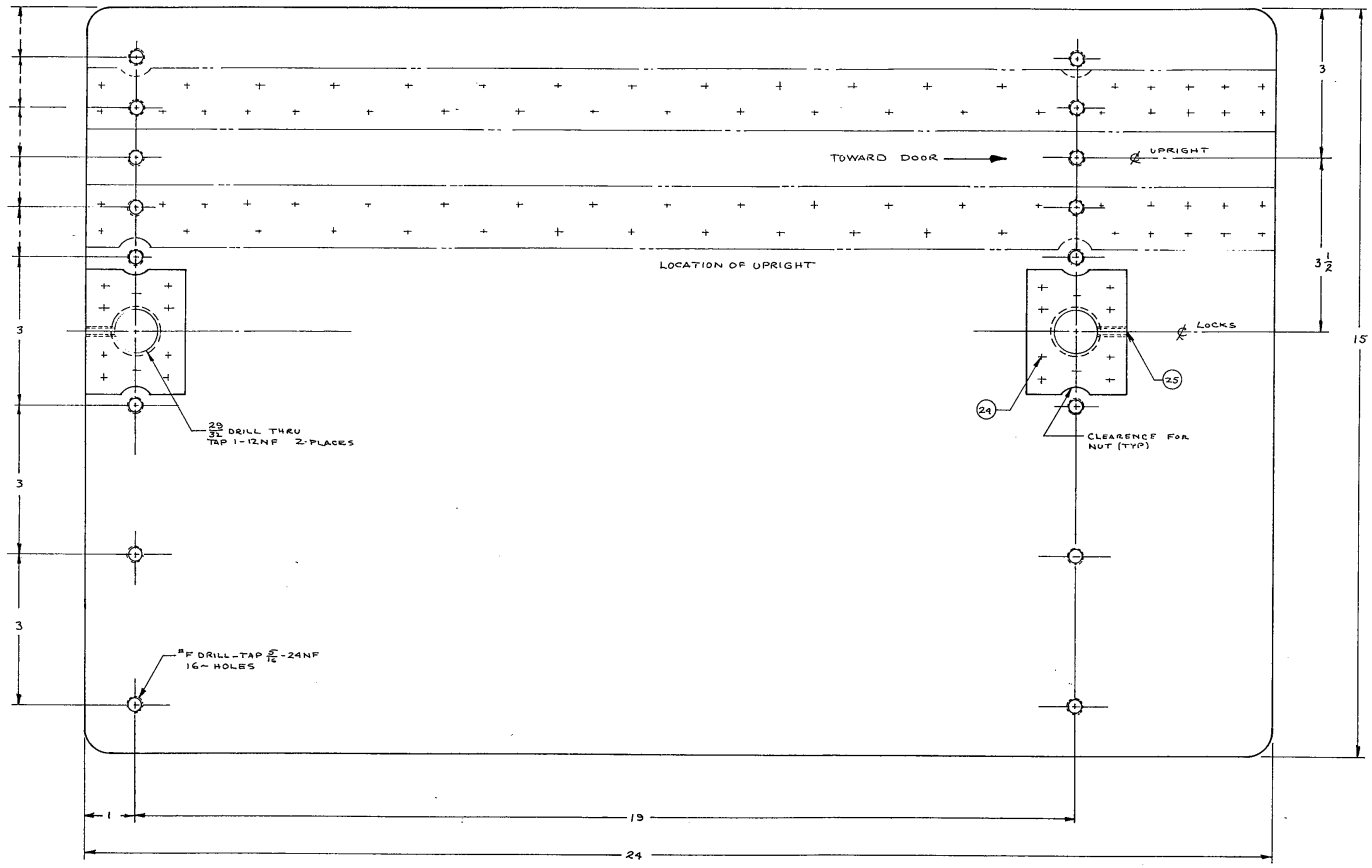

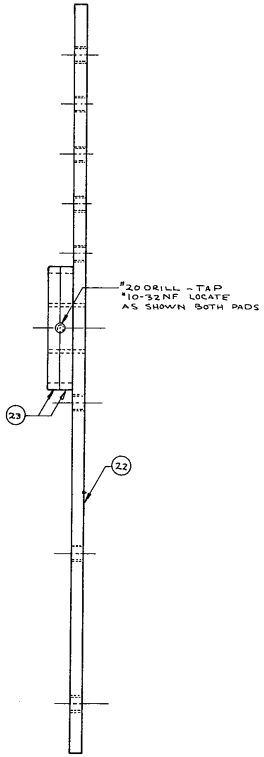

(21) BASE

This is a ***REDUCED PRINT***

UNLESS OTHERWISE SPECIFIED
TOLERANCES:
FRACTIONS ± 1/32
DECIMALS ± .005
ANGLES ± 2°
DIMENSIONS ARE IN INCHES
BREAK SHARP EDGES

DATE	REVISION	BY

U.S. DEPT. OF AGRICULTURE
FOREST SERVICE
TECHNOLOGY & DEVELOPMENT CENTER
MISSOULA, MONTANA

DRAWN LASSILA
DESIGNED LASSILA
CHECKED
APPROVED
SCALE FULL
DATE Nov 1991

TITLE
C-23 PRIMARY
VERTICAL ANCHOR CABLE

SHEET 3 OF 4

MTDC-877

MATERIALS LIST

NO	PART NAME	REQD	MATERIAL-DESCRIPTION	SHEET
31	DOUBLER	1	PARTS 32-34	
32	DOUBLER	1	.063 THICK 2024-T3 ALUM ALLOY SHEET	
33	T-NUT	3	MS20078-4 OR NAS1023N4	
34	RIVET	6	MS20426AD4-5	
35	END BRACKET	2	.063 THICK 2024-T3 ALUM ALLOY SHEET	
36	BRACKET	1	1X1¼X3LG 6061-T6 ALUM ALLOY FLAT	
37	TUBE	1	PARTS	
38	TUBE	1	¾ SCH40 ALUM PIPE	
39	PLUG	2	¾ DIA ALUM ROUND	
40	TOP	1	UHMD PLASTIC	

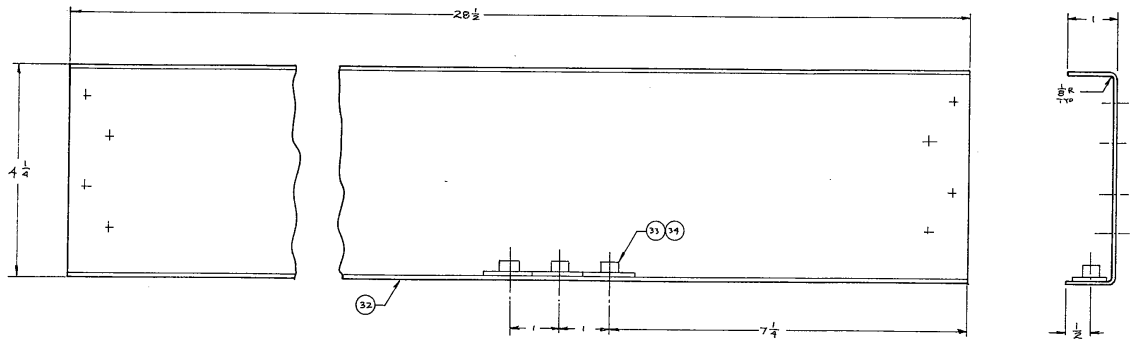

(31) DOUBLER

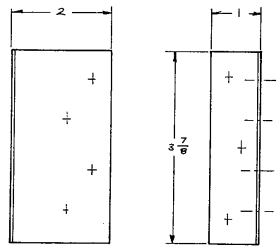

(35) END BRACKET

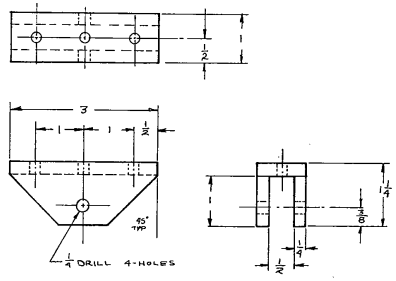

(36) BRACKET

This is a REDUCED PRINT

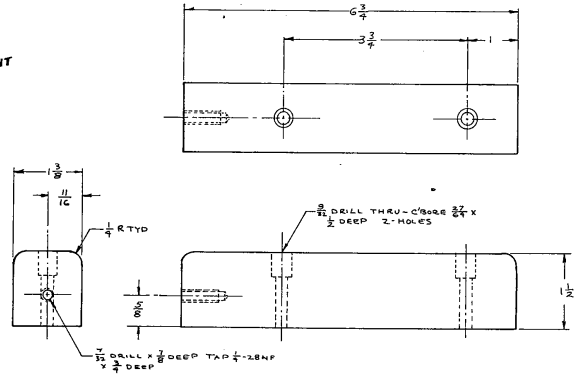

(40) TOP

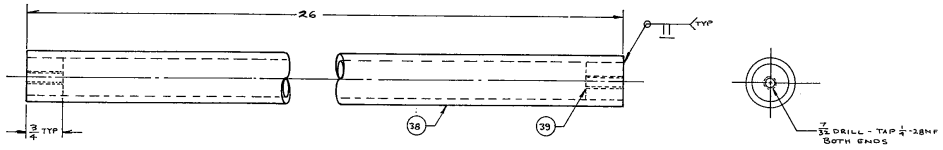

(37) TUBE

UNLESS OTHERWISE SPECIFIED	DATE	REVISION	BY
TOLERANCES: FRACTIONS ± ___ DECIMALS ± ___ ANGLES ± ___ DIMENSIONS ARE IN INCHES BREAK SHARP EDGES	U.S. DEPT. OF AGRICULTURE FOREST SERVICE TECHNOLOGY & DEVELOPMENT CENTER MISSOULA, MONTANA		
DRAWN LASSILA	TITLE C-23 PRIMARY VERTICAL ANCHOR CABLE		
DESIGNED			
CHECKED			
APPROVED			
SCALE FULL			
DATE FEB 1992	SHEET 4 OF 4	MTDC-877	

(9) SHOCK ABSORBER ASS'Y

BELLEVILLE SPRING WASHER DETAIL

NOTE SPRING ORIENTATION CAREFULLY

IT IS IMPORTANT TO ASSEMBLE BELLEVILLE WASHERS IN THE PROPER SEQUENCE TO ACHIEVE THE DESIRED SHOCK ABSORBING ACTION

----DRAWING NOT TO SCALE----

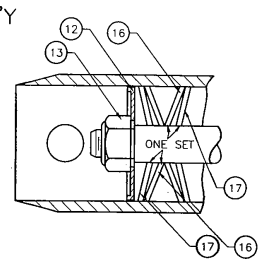

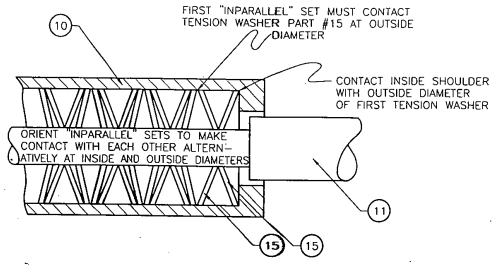

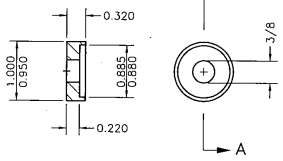

SECTION AA

(12) KEEPER

FULL SCALE

MATERIAL LIST

NO	PART NAME	REQD	MATERIAL-DESCRIPTION	SHEET
1	ANCHOR PLATE &			
	SHOCK AB ASSY	1	PARTS 2 THRU 17	
2	BRACKET-FWD & AFT	2	2 X 3 X 1/4 WALL RECT STEEL TUBE	
3	STANCHION			
	FITTINGS	4	ANCRA #40443-13	
4	LOCK NUT	4	3/8 - 24 FIBERLOCK HEX NUT	
5	STUD CABLE END	1	MS 21259 - 8RH W/WIRE LOCK NUT	
6	CABLE	1	1/4 DIA 7 X 19 GALVANIZED AIRCRAFT CABLE 26 FT LG	
7	CAPSCREW	1	1/2 - 13 UNC X 2 1/2 CAPSCREW GRADE 8 W/NYLOCK NUT	
7B	CAPSCREW	1	3/8 - 24 UNC X 2 1/2 CAPSCREW GRADE 8 W/NYLOCK NUT	
8	SPACER	4	1" ROUND 6061 - T6 ALUMINUM	
9	SHOCK ABSORBER			
	ASS'Y	1	PARTS #10 THRU 17	
10	SA BODY	1	1 1/2 X 3/8 WALL MECH. TUBE 1020 STEEL.	
11	CENTER ROD	1	1 ROUND COLD ROLLED 1117 STEEL	
12	KEEPER	1	1 ROUND COLD ROLLED 1117 STEEL	
13	NUT	1	3/8 - 24 LOCK NYLOCK HEX NUT	
14	LOCK RING	1	5/8 ID WASHER GRADE 8 STEEL WASHERS	
15	TENSION WASHER	2	BELLEVILLE, BARNES #B1000 - 035S	
16	ABSORBER WASHER	20	BELLEVILLE, BARNES #B1000 - 50S	
17	ABSORBER WASHER	20	BELLEVILLE, BARNES #B1000 - 073S	
40	TERMINAL	1	MS 20667-8 WIRE ROPE FORK END	

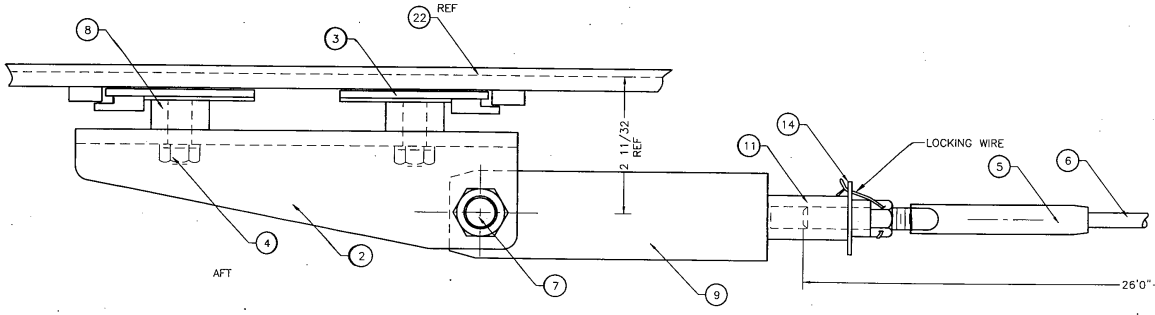

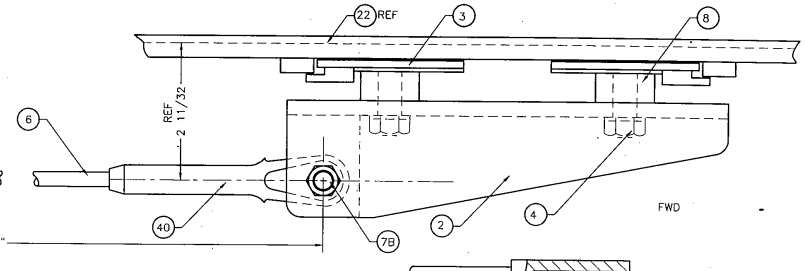

(1) ANCHOR AND SHOCK ABSORBER

FULL SCALE

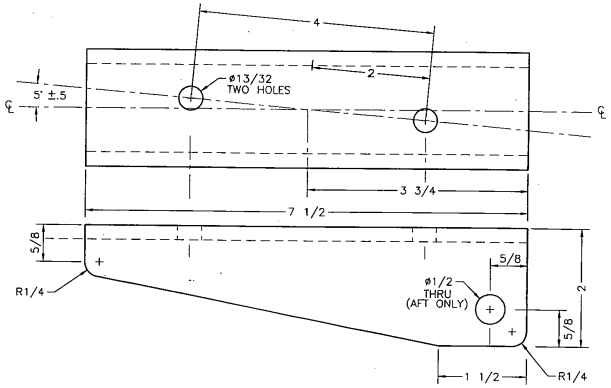

(2) BRACKET-FWD & AFT

FULL SCALE

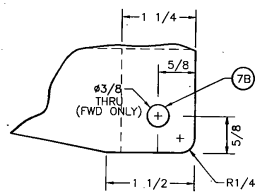

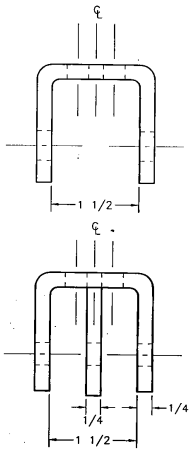

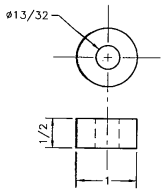

(8) SPACERS

FULL SCALE

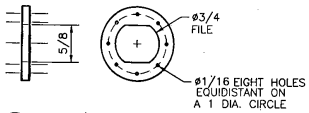

(14) LOCK RING

FULL SCALE

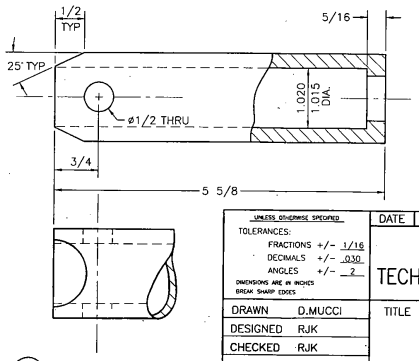

(10) S.A. BODY

FULL SCALE

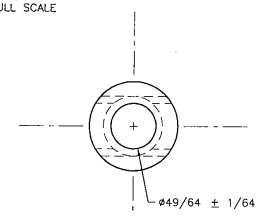

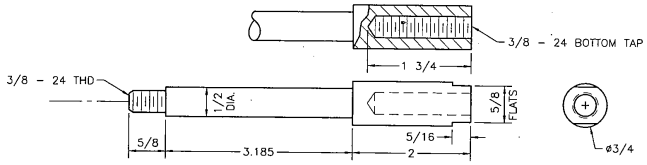

(11) CENTER ROD

FULL SCALE

UNLESS OTHERWISE SPECIFIED
TOLERANCES:
FRACTIONS +/- 1/16
DECIMALS +/- .030
ANGLES +/- 2
DIMENSIONS ARE IN INCHES
BREAK SHARP EDGES

DRAWN	D.MUCCI		
DESIGNED	RJK		
CHECKED	RJK		
APPROVED	RJK		
SCALE	FULL		
DATE	09/20/95		

DATE	REVISION	BY

U. S. DEPT. OF AGRICULTURE
FOREST SERVICE
TECHNOLOGY & DEVELOPMENT CENTER
MISSOULA, MONTANA

TITLE
C-23
HORIZONTAL
ANCHOR

SHEET 1 OF 5

MTDC-896

MATERIAL LIST

NO	PART NAME	REQD	MATERIAL-DESCRIPTION	SHEET
18	STRINGER PLATE	4	.063 ALUMINUM SHEET 2024-T3	
20	BASE PLATE	1	.090 ALUMINUM SHEET 2024-T3	
21	TEENUT	30	MS21059 - L4K	
22	SEAT TRACK	2	ANCRA #40467 - MS33601 HEAVY DUTY	
23	SCREW	30	MS24694 - S107	
24	RIVET	AR	MS20426 - AD3 - 4	

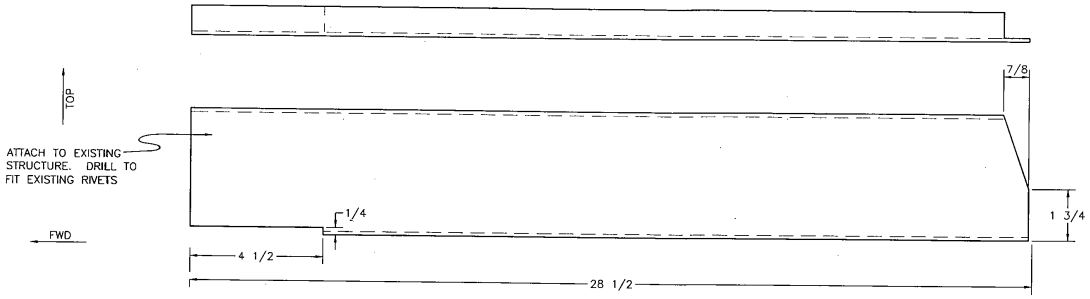

(18A) LH STRINGER PLATE
HALF SCALE

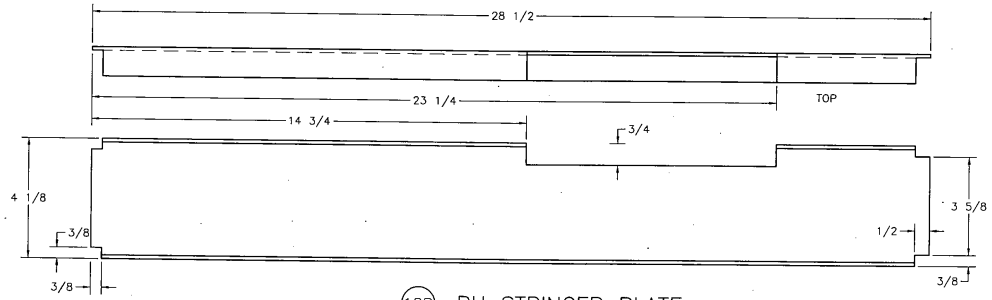

(18B) RH STRINGER PLATE
HALF SCALE

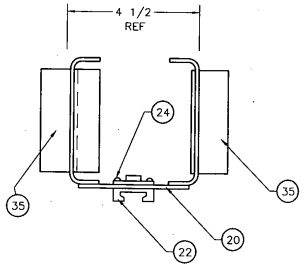

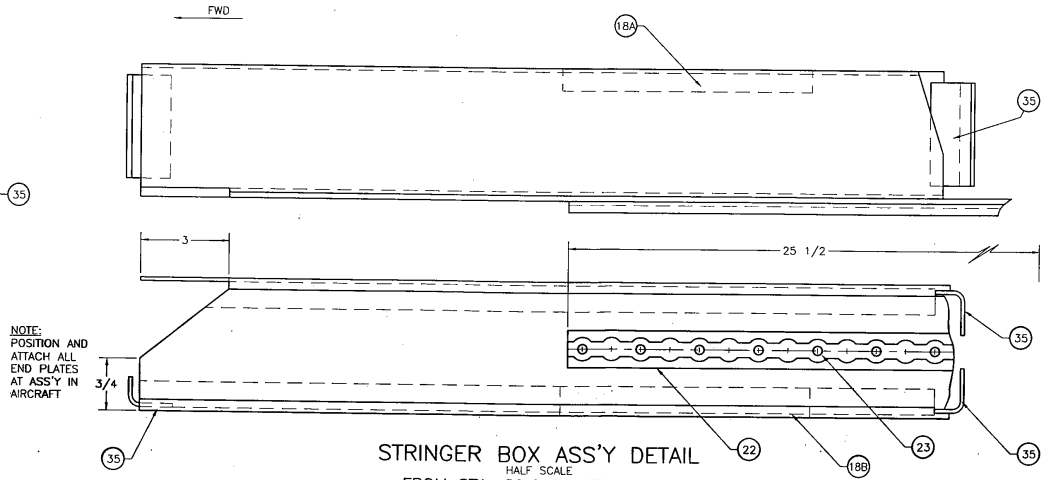

NOTE:
POSITION AND ATTACH ALL END PLATES AT ASS'Y IN AIRCRAFT

STRINGER BOX ASS'Y DETAIL
HALF SCALE
FROM STA. 89.0 TO STA. 117.6

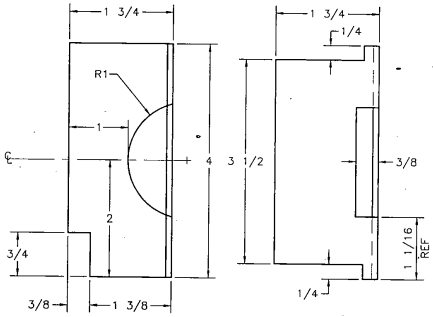

(36) END PLATE-B
FULL SCALE

UNLESS OTHERWISE SPECIFIED		DATE	REVISION	BY
TOLERANCES: FRACTIONS +/- 1/16; DECIMALS +/- .030; ANGLES +/- 2; DIMENSIONS ARE IN INCHES; BREAK SHARP EDGES			U. S. DEPT. OF AGRICULTURE FOREST SERVICE TECHNOLOGY & DEVELOPMENT CENTER MISSOULA, MONTANA	
DRAWN	D.MUCCI	TITLE	C-23 HORIZONTAL ANCHOR	
DESIGNED	RJK			
CHECKED	RJK			
APPROVED	RJK			
SCALE	FULL			
DATE	09/20/95	SHEET 2 OF 5	MTDC-896	

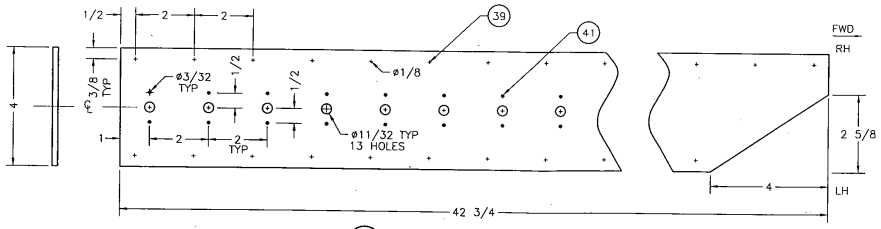

20 BASE PLATE

HALF SCALE
ATTACH TO STRINGER BOX ASS'Y AT AIRCRAFT INSTALLATION (BOTTOM VIEW)

MATERIAL LIST

NO	PART NAME	REQD	MATERIAL-DESCRIPTION	SHEET
25	STRINGER PLATE	2	.090 ALUMINUM SHEET 2024-T3	
26	DOUBLER	1	.090 ALUMINUM SHEET 2024-T3	
35	END PLATE	4	.090 ALUMINUM SHEET 2024-T3	
36	END PLATE	1	.090 ALUMINUM SHEET 2024-T3	
37	END PLATE	1	.090 ALUMINUM SHEET 2024-T3	
38	END PLATE	1	.090 ALUMINUM SHEET 2024-T3	
39	RIVET	AR	MS20426 - AD4	
41	RIVET	AR	MS20426 - AD3 - 4	

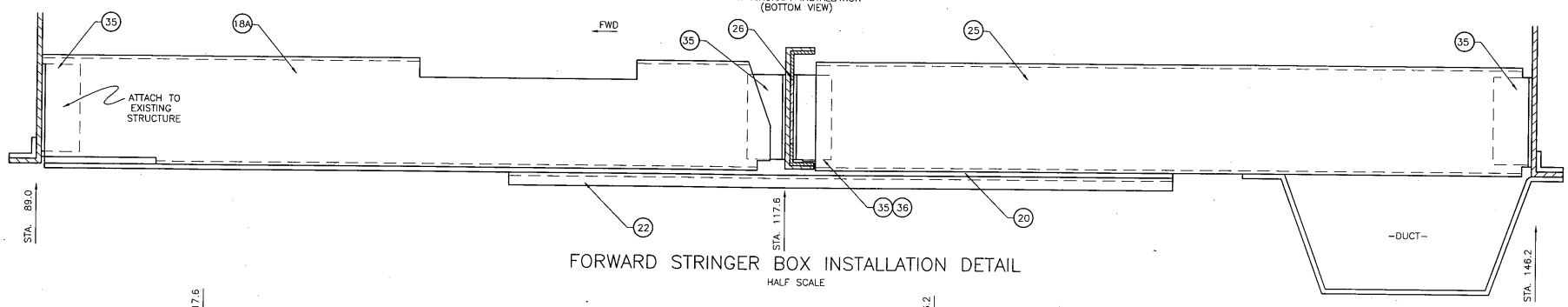

FORWARD STRINGER BOX INSTALLATION DETAIL

HALF SCALE

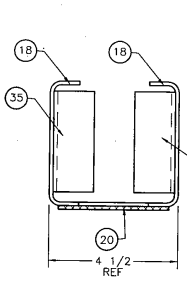

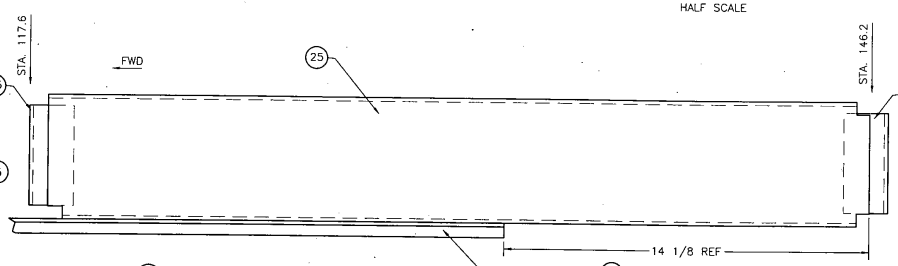

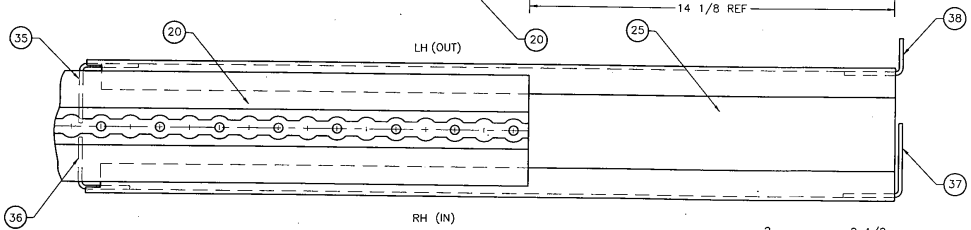

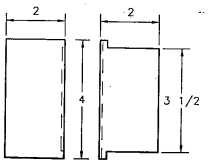

35 END PLATE A

HALF SCALE

STRINGER BOX ASS'Y DETAIL

HALF SCALE
FROM STA. 117.6 TO STA. 146.2
BOTTOM VIEW

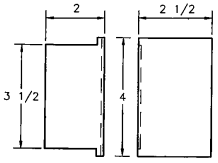

37 END PLATE D

HALF SCALE

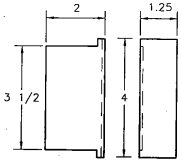

38 END PLATE C

HALF SCALE

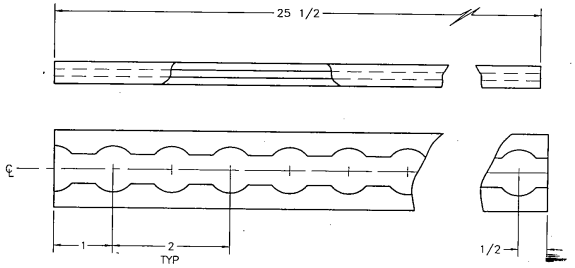

22 FWD & AFT TRACK DETAIL

FULL SCALE

UNLESS OTHERWISE SPECIFIED
TOLERANCES:
FRACTIONS +/- 1/16
DECIMALS +/- .030
ANGLES +/- 2
DIMENSIONS ARE IN INCHES
BREAK SHARP EDGES

DATE	REVISION	BY

U. S. DEPT. OF AGRICULTURE
FOREST SERVICE
TECHNOLOGY & DEVELOPMENT CENTER
MISSOULA, MONTANA

DRAWN	D.MUCCI
DESIGNED	RJK
CHECKED	RJK
APPROVED	RJK
SCALE	FULL
DATE	09/20/95

TITLE
C-23
HORIZONTAL
ANCHOR

SHEET 3 OF 5

MTDC-896

MATERIAL LIST

NO	PART NAME	REQD	MATERIAL–DESCRIPTION	SHEET
28	AFT STRINGER PLATE			
	A	2	.063 ALUMINUM SHEET 2024–T3	
29	AFT STRINGER PLATE		RH & LH PARTS	
	B	2	.063 ALUMINUM SHEET 2024–T3	
30	AFT PLATE	1	.063 ALUMINUM SHEET 2024–T3	
31	END PLATE	4	.090 ALUMINUM SHEET 2024–T3	
32	AFT BASE PLATE	1	.090 ALUMINUM SHEET 2024–T3	

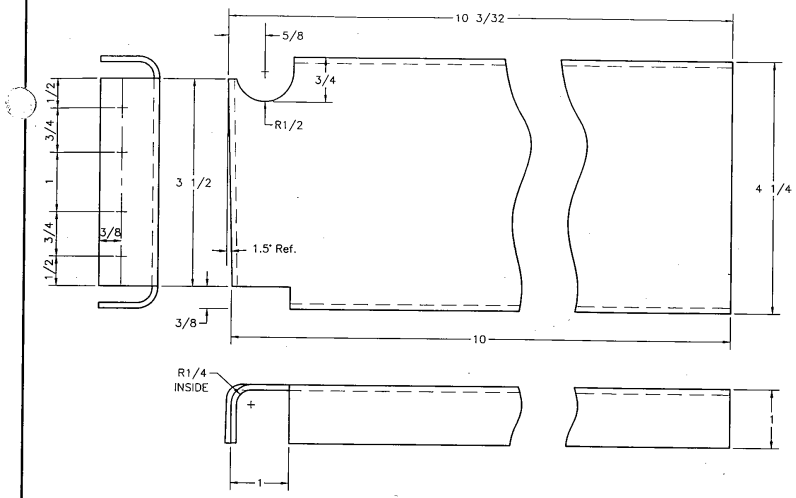

28 AFT STRINGER PLATE A

FULL SCALE
CONSTRUCT LH & RH
(LH SHOWN)

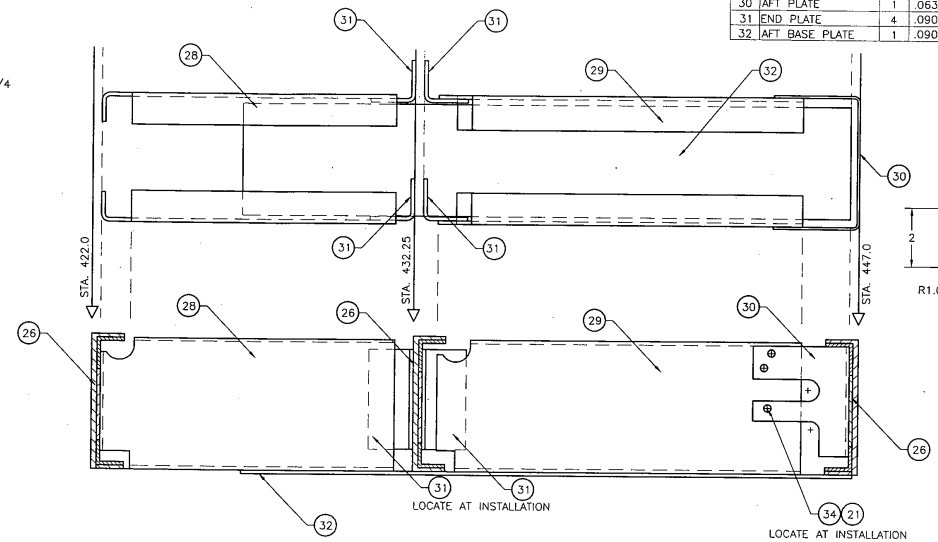

AFT STRINGER BOX ASS'Y DETAIL

NOT TO SCALE

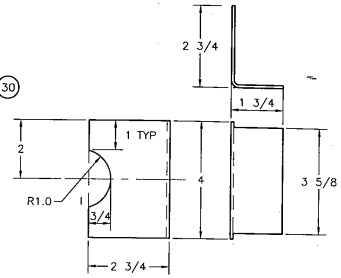

31 END PLATES

HALF SCALE
CUT OUT ON ONE
PIECE ONLY

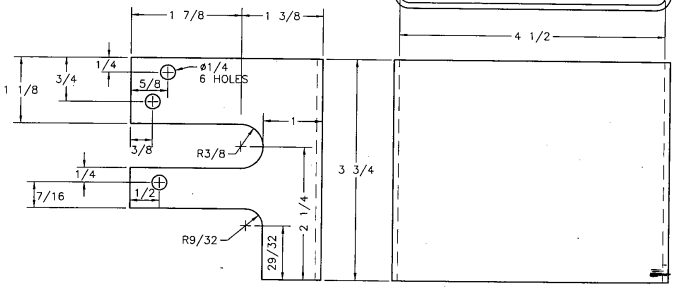

30 AFT PLATE

FULL SCALE

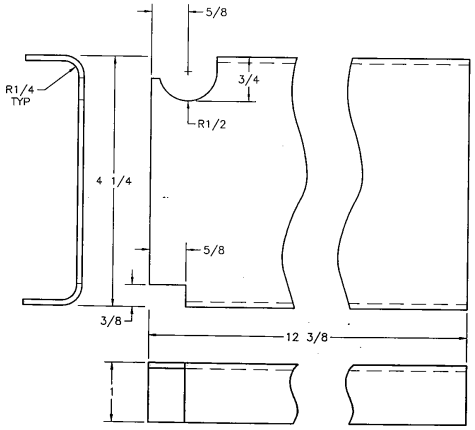

29 AFT STRINGER PLATE B

FULL SCALE
CONSTRUCT RH & LH PARTS
LH SHOWN

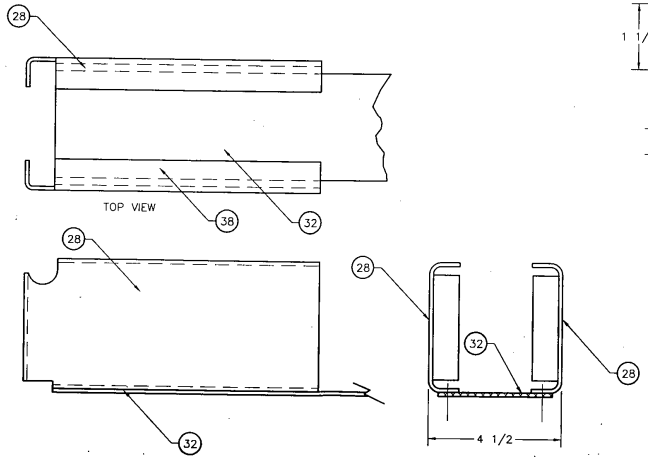

AFT STRINGER BOX A ASS'Y DETAIL

HALF SCALE

UNLESS OTHERWISE SPECIFIED		DATE	REVISION	BY
TOLERANCES: FRACTIONS +/- 1/16; DECIMALS +/- .030; ANGLES +/- 2; DIMENSIONS ARE IN INCHES; BREAK SHARP EDGES			U. S. DEPT. OF AGRICULTURE FOREST SERVICE TECHNOLOGY & DEVELOPMENT CENTER MISSOULA, MONTANA	
DRAWN	D.MUCCI			
DESIGNED	RJK	TITLE	C–23 HORIZONTAL ANCHOR	
CHECKED	RJK			
APPROVED	RJK			
SCALE	FULL			
DATE	09/20/95	SHEET 4 OF 5		MTDC–896

MATERIAL LIST

NO	PART NAME	REQD	MATERIAL-DESCRIPTION	SHEET
33	AFT PLATE	1	.063 ALUMINUM SHEET 2024-T3	
34	CAP SCREW	6	1/4 - 20 UNC X 1/2 ROUND HEAD SOCKET GR5	

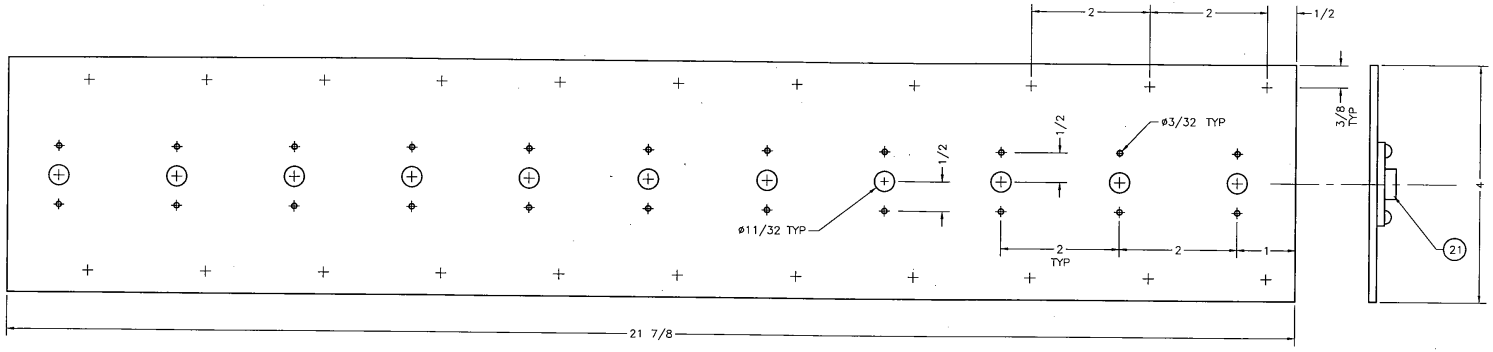

(32) AFT BASE PLATE
FULL SCALE

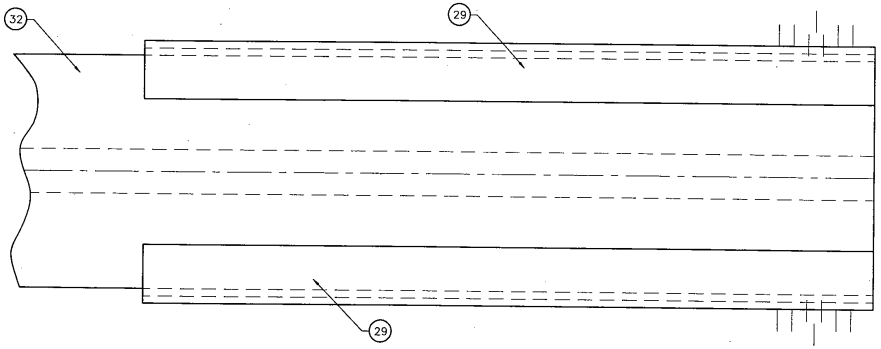

AFT STRINGER BOX ASS'Y DETAIL
FULL SCALE

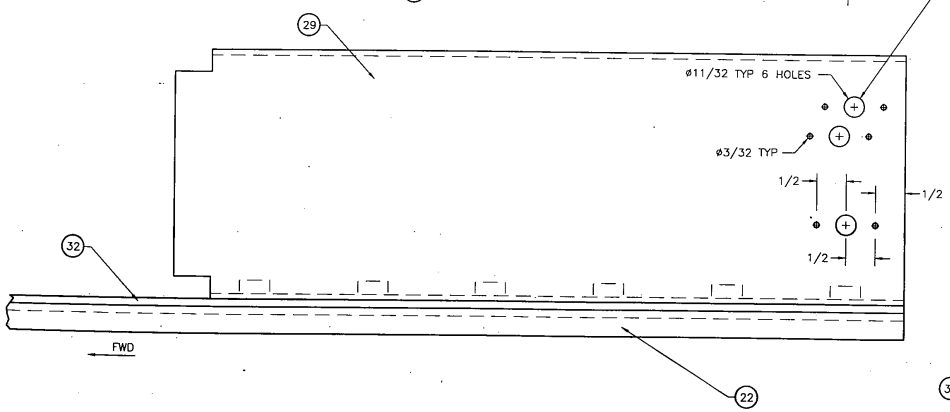

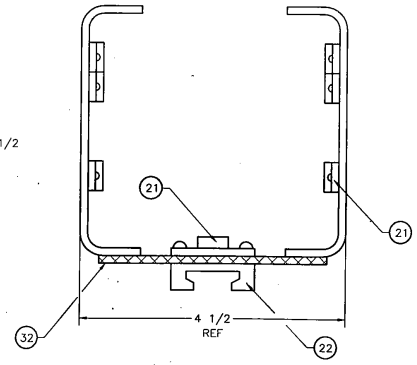

UNLESS OTHERWISE SPECIFIED
TOLERANCES:
FRACTIONS +/- 1/16
DECIMALS +/- .030
ANGLES +/- 2
DIMENSIONS ARE IN INCHES
BREAK SHARP EDGES

DRAWN	D.MUCCI
DESIGNED	RJK
CHECKED	RJK
APPROVED	RJK
SCALE	FULL
DATE	09/20/95

DATE	REVISION	BY

U. S. DEPT. OF AGRICULTURE
FOREST SERVICE
TECHNOLOGY & DEVELOPMENT CENTER
MISSOULA, MONTANA

TITLE
C-23
HORIZONTAL
ANCHOR

SHEET 5 OF 5

MTDC-896

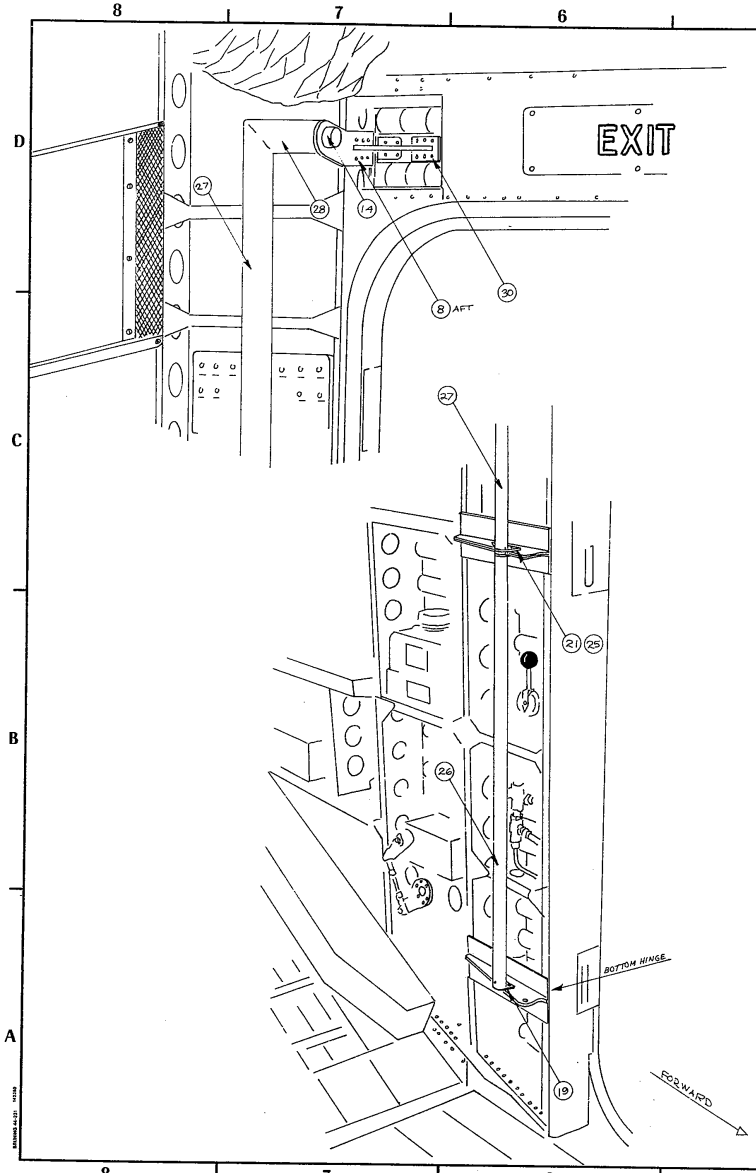

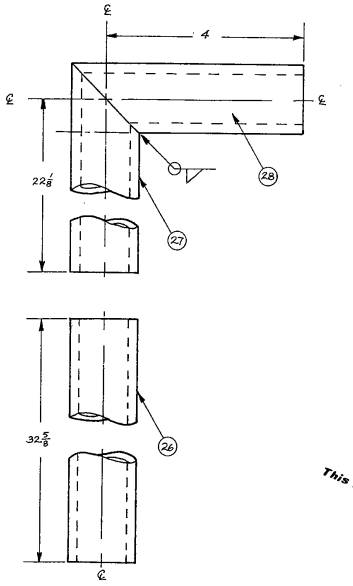

AFT HANDRAIL ASS'Y DETAIL
FULL SCALE

This is a REDUCED PRINT

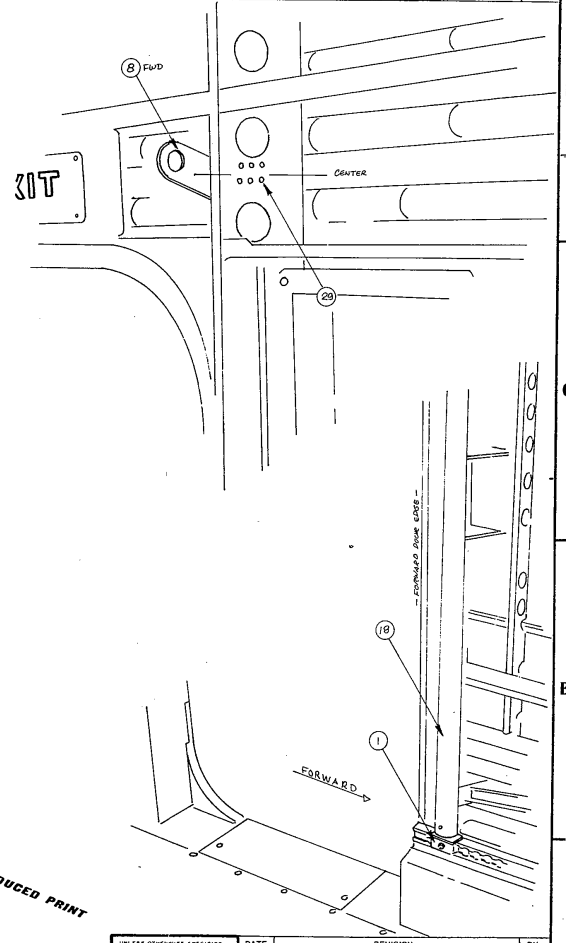

MATERIALS LIST

NO	PART NAME	REQD	MATERIAL-DESCRIPTION	SHEET

UNLESS OTHERWISE SPECIFIED TOLERANCES: FRACTIONS ± 1/32, DECIMALS ± .005, ANGLES ± 2° DIMENSIONS ARE IN INCHES BREAK SHARP EDGES	DATE / REVISION / BY
DRAWN W. KILROY	U.S. DEPT. OF AGRICULTURE FOREST SERVICE TECHNOLOGY & DEVELOPMENT CENTER MISSOULA, MONTANA
DESIGNED W. KILROY	TITLE C-23 HANDRAILS ASSEMBLY DETAILS
CHECKED	
APPROVED	
SCALE	
DATE JANUARY 1993	SHEET 1 OF 4 — MTDC-868

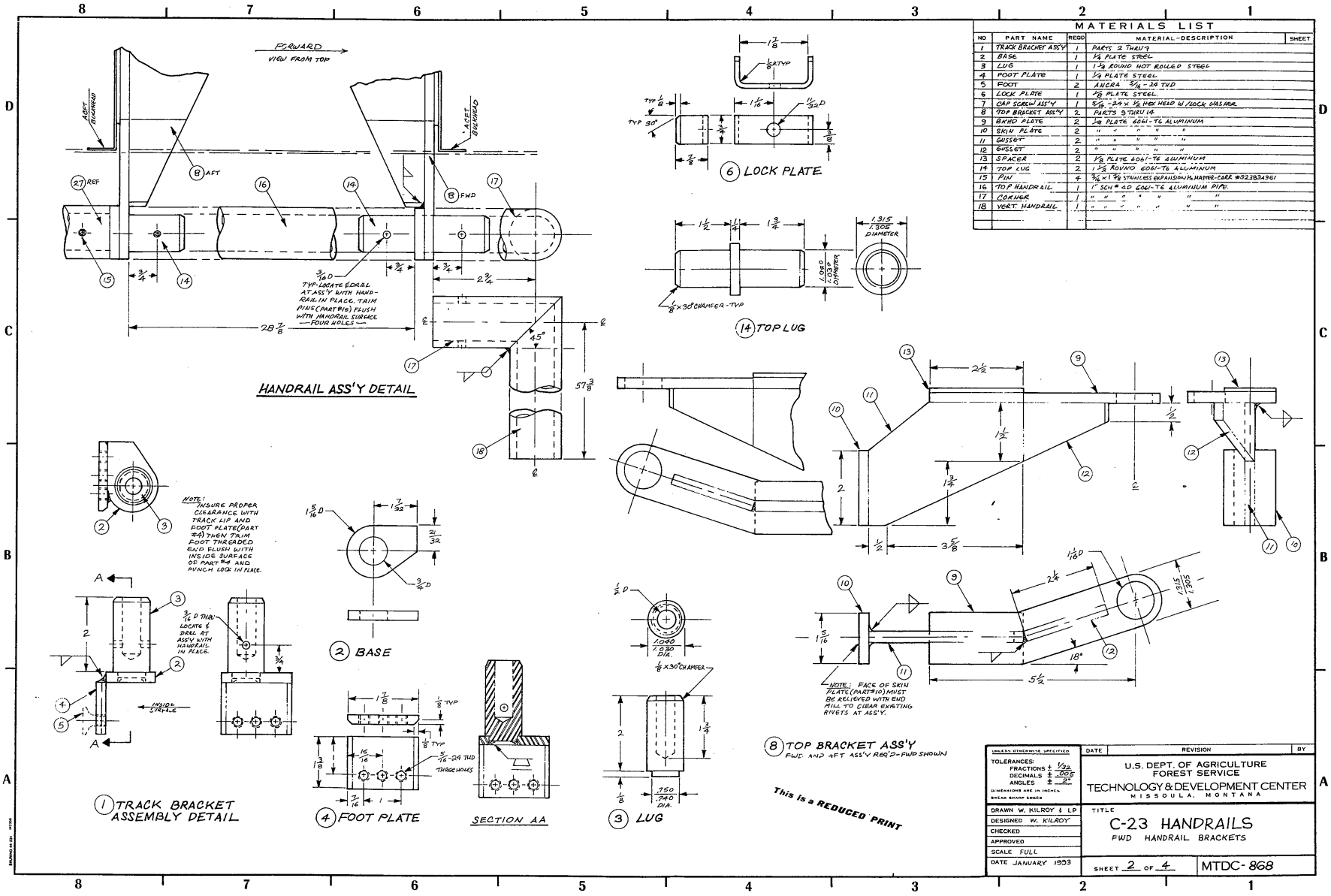

MATERIALS LIST

NO	PART NAME	REQD	MATERIAL-DESCRIPTION	SHEET
1	TRACK BRACKET ASS'Y	1	PARTS 2 THRU 7	
2	BASE	1	1/4 PLATE STEEL	
3	LUG	1	1 1/2 ROUND HOT ROLLED STEEL	
4	FOOT PLATE	1	1/4 PLATE STEEL	
5	FOOT	2	ANCRA 5/16 - 24 THD	
6	LOCK PLATE	1	1/8 PLATE STEEL	
7	CAP SCREW ASS'Y	1	5/16 - 24 x 1/2 HEX HEAD W/LOCK WASHER	
8	TOP BRACKET ASS'Y	2	PARTS 9 THRU 14	
9	BKHD PLATE	2	1/4 PLATE 6061-T6 ALUMINUM	
10	SKIN PLATE	2	" " " " "	
11	GUSSET	2	" " " " "	
12	GUSSET	2	" " " " "	
13	SPACER	2	1/8 PLATE 6061-T6 ALUMINUM	
14	TOP LUG	2	1 1/2 ROUND 6061-T6 ALUMINUM	
15	PIN	4	3/16 x 1 3/8 STAINLESS EXPANSION MASTER-CARR #92383A361	
16	TOP HANDRAIL	1	1" SCH # 40 6061-T6 ALUMINUM PIPE.	
17	CORNER	1	" " " " " " "	
18	VERT. HANDRAIL	1	" " " " " " "	

UNLESS OTHERWISE SPECIFIED
TOLERANCES:
FRACTIONS ± 1/32
DECIMALS ± .005
ANGLES ± 2°
DIMENSIONS ARE IN INCHES
BREAK SHARP EDGES

DATE	REVISION	BY

U.S. DEPT. OF AGRICULTURE
FOREST SERVICE
TECHNOLOGY & DEVELOPMENT CENTER
MISSOULA, MONTANA

DRAWN W. KILROY & LP
DESIGNED W. KILROY
CHECKED
APPROVED
SCALE FULL
DATE JANUARY 1993

TITLE
C-23 HANDRAILS
FWD HANDRAIL BRACKETS

SHEET 2 OF 4
MTDC-868

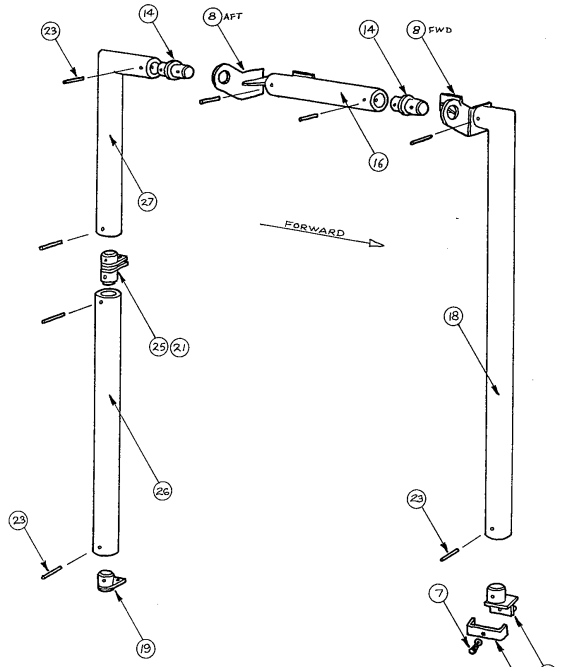

HANDRAIL ASSEMBLY DETAIL
NO SCALE

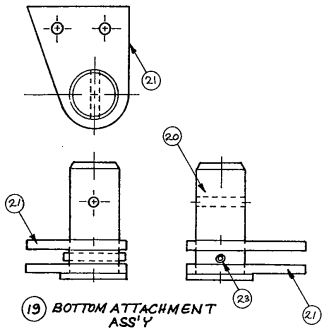

(19) BOTTOM ATTACHMENT ASS'Y

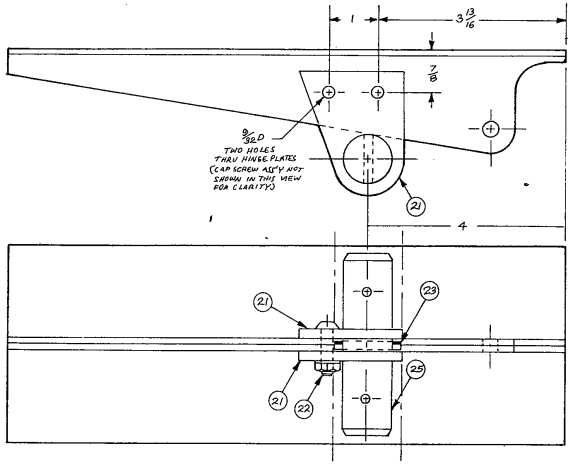

(24) TOP HINGE ATTACHMENT ASS'Y

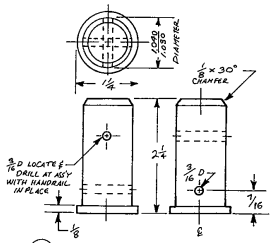

(20) BOTTOM HINGE LUG
FULL SCALE

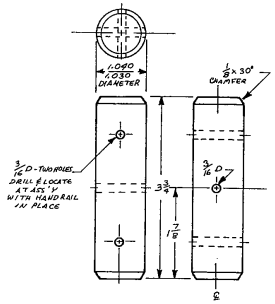

(25) TOP HINGE LUG
FULL SCALE

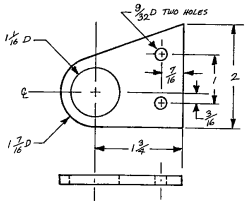

(21) CONNECTER PLATE
FULL SCALE

This is a REDUCED PRINT

MATERIALS LIST

NO	PART NAME	REQD	MATERIAL-DESCRIPTION	SHEET
19	BOTTOM ATTACHMENT			
	ASS'Y	1	PARTS 20 THRU 23	
20	BOTTOM HINGE LUG	1	1 1/4 ROUND 6061-T6 ALUMINUM	
21	CONNECTOR PLATE	4	3/16 PLATE STEEL	
22	CAP SCREW ASS'Y	4	1/4-20 X 1 BUTTON HEAD SOCKET W/LOCK WASHER & NUT	
23	PIN	6	3/16 X 1 3/8 STAINLESS EXPANSION MONO-TRE-CLAMP #SS383A041	
24	TOP HINGE ATTACHMENT			
	ASS'Y	1	PARTS 25 & 21 THRU 23	
25	TOP HINGE LUG	1	1 1/4 ROUND 6061-T6 ALUMINUM	
26	LOWER AFT HANDRAIL	1	1" SCH 40 6061-T6 ALUMINUM PIPE	
27	TOP AFT HAND RAIL	1	" " " " " " "	
28	AFT CORNER	1	" " " " " " "	
29	RIVET			
30	CAP SCREW ASS'Y			

UNLESS OTHERWISE SPECIFIED
TOLERANCES:
FRACTIONS ± 1/32
DECIMALS ± .005
ANGLES ± 2°
DIMENSIONS ARE IN INCHES
BREAK SHARP EDGES

DATE	REVISION	BY

U.S. DEPT. OF AGRICULTURE
FOREST SERVICE
TECHNOLOGY & DEVELOPMENT CENTER
MISSOULA, MONTANA

DRAWN W. KILROY & LP
DESIGNED W. KILROY
CHECKED
APPROVED
SCALE FULL & NOTED
DATE JANUARY 1993

TITLE
C-23 HANDRAILS
AFT HANDRAIL BRACKETS

SHEET 3 OF 4
MTDC- 868

MATERIALS LIST

NO	PART NAME	REQD	MATERIAL-DESCRIPTION	SHEET
31	PORT SIDE BRACKET	1	PARTS 2 THRU 4	
32	WEB	1	1/4 PLATE 6061-T6 ALUMINUM	
33	PLATE	3	" " " " "	
34	STUD	1	1 3/4 ROUND 6061-T6 ALUMINUM	
35	TOP BRACKET	1	PARTS 6 THRU 8	
36	PLATE	2	1/4 PLATE 6061-T6 ALUMINUM	
37	CAP SCREW	1	1/2-13 X 1 1/2 BUTTON HEAD SOCKET CAP SCREW	
38	HAND RAIL	1	1" SCH 40 6061-T6 ALUMINUM PIPE	
39	END PLUG	1	1 1/2 ROUND 6061-T6 ALUMINUM	
40	ROLL PIN	1	3/16 X 1 1/2 STEEL EXPANSION PIN	

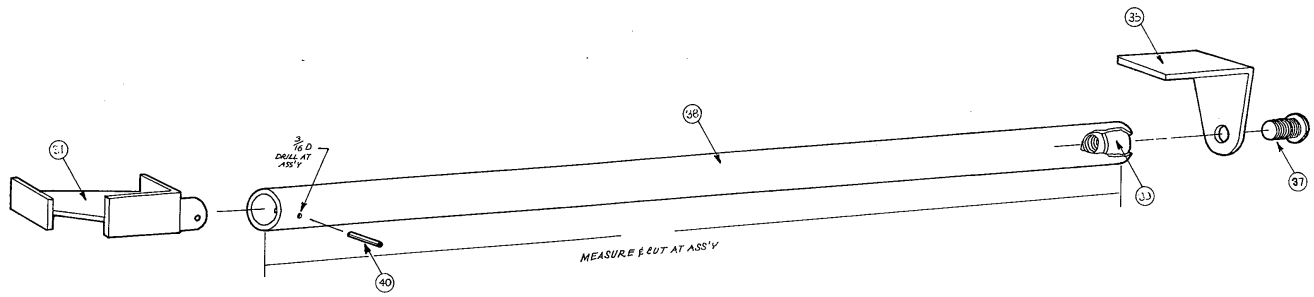

TOP HORIZONTAL HANDRAIL

This is a REDUCED PRINT

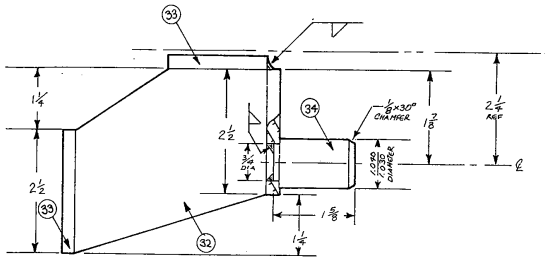

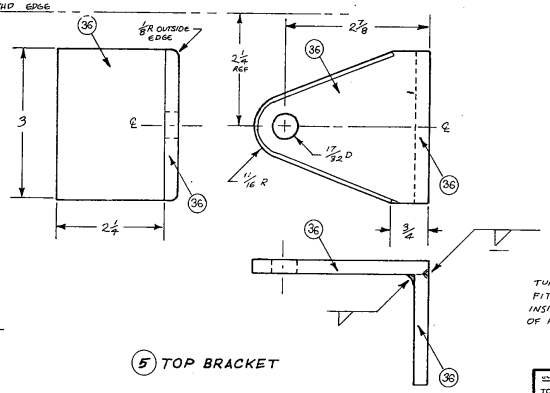

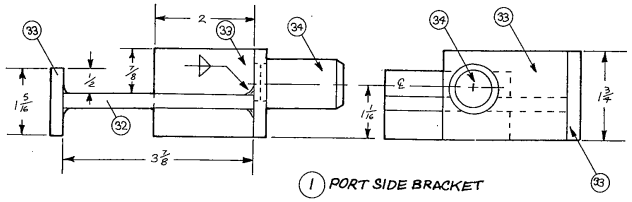

1 PORT SIDE BRACKET

5 TOP BRACKET

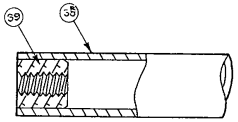

INBOARD END OF HANDRAIL DETAIL

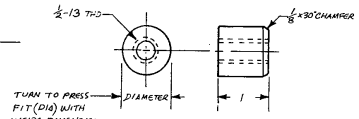

9 END PLUG

UNLESS OTHERWISE SPECIFIED	DATE	REVISION	BY
TOLERANCES: FRACTIONS ± 1/32, DECIMALS ± .005, ANGLES ± 2°	U.S. DEPT. OF AGRICULTURE FOREST SERVICE TECHNOLOGY & DEVELOPMENT CENTER MISSOULA, MONTANA		
DIMENSIONS ARE IN INCHES. BREAK SHARP EDGES			
DRAWN W. KILROY	TITLE		
DESIGNED W. KILROY	C-23 HANDRAILS		
CHECKED	TOP HORIZONTAL HANDRAIL		
APPROVED			
SCALE FULL			
DATE JANUARY 1993	SHEET 4 OF 4	MTDC- 868	

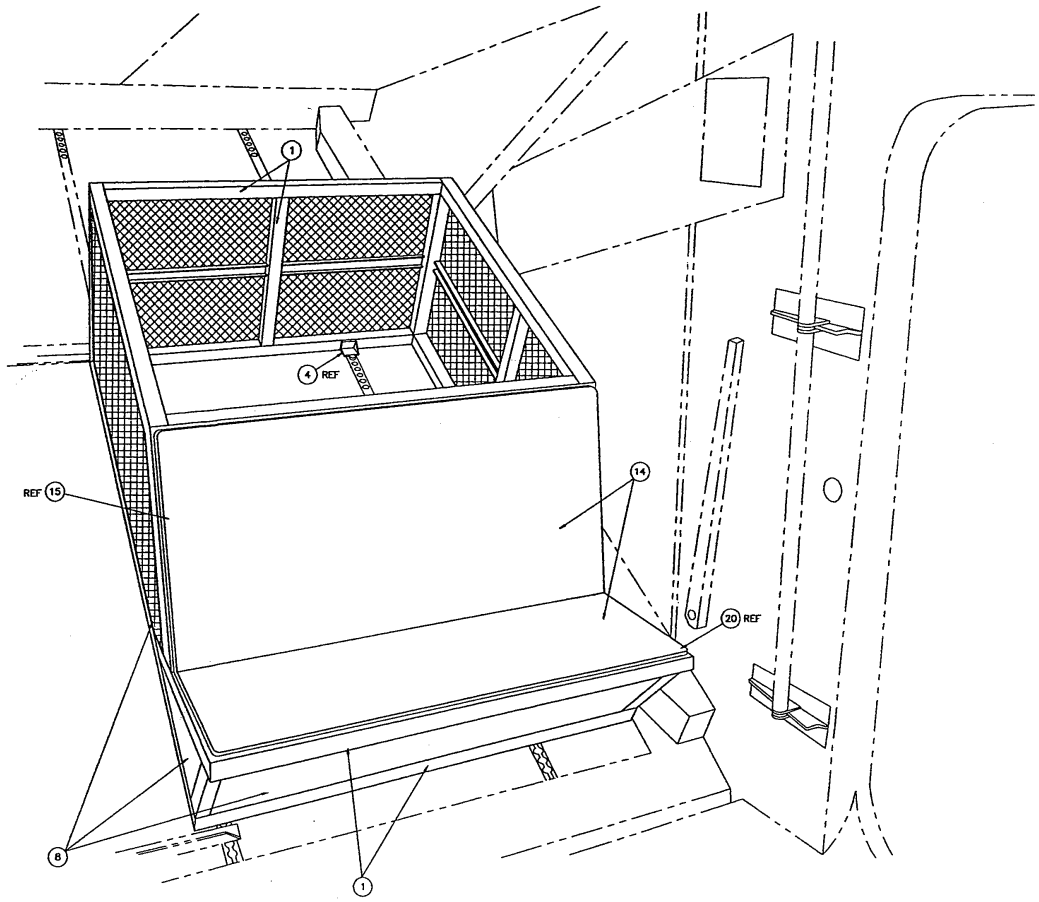

MATERIAL LIST

NO	PART NAME	REQD	MATERIAL–DESCRIPTION	SHEET
1	FRAME	1	PARTS 2 – 7.	2–4
8	SKIN PANELS	AR	PARTS 9 – 13.	5
14	SEAT ASSEMBLY	1	PARTS 15 – 25.	6

UNLESS OTHERWISE SPECIFIED
TOLERANCES:
FRACTIONS +/- ___
DECIMALS +/- ___
ANGLES +/- ___
DIMENSIONS ARE IN INCHES
BREAK SHARP EDGES

DATE	REVISION	BY

U. S. DEPT. OF AGRICULTURE
FOREST SERVICE
TECHNOLOGY & DEVELOPMENT CENTER
MISSOULA, MONTANA

DRAWN BILL WYATT
DESIGNED
CHECKED
APPROVED D. PIERCE
SCALE NONE
DATE SEPT. – 92

TITLE
C–23 CARGO BIN

881_23BIN_1ASSY

SHEET 1 OF ___

MTDC– 881

MATERIAL LIST

NO	PART NAME	REQD	MATERIAL-DESCRIPTION	SHEET
1	FRAME	1	PARTS 2 - 7.	2-4
2	MAIN FRAMING	AR	1 1/2 X .0625 WALL SQ. TUBE, 6063-T6 ALUM.	
3	SUB FRAMING	AR	1 1/2 X 1/2 X 1/8 BAR CHANNEL, 6063 ALUM.	
4	TRACK BRACKET	4	PARTS 5 - 7.	
5	BASE	4	1 1/4 X 1 1/4 X 1/4 ANGLE, 6061 ALUM.	
6	GUSSET	4	1/8 PLATE, 6061 ALUMINUM.	
7	TRACK STUD ASSY.	4	ANCRA NO. 40443 W/ 3/8-24 STOP NUT.	

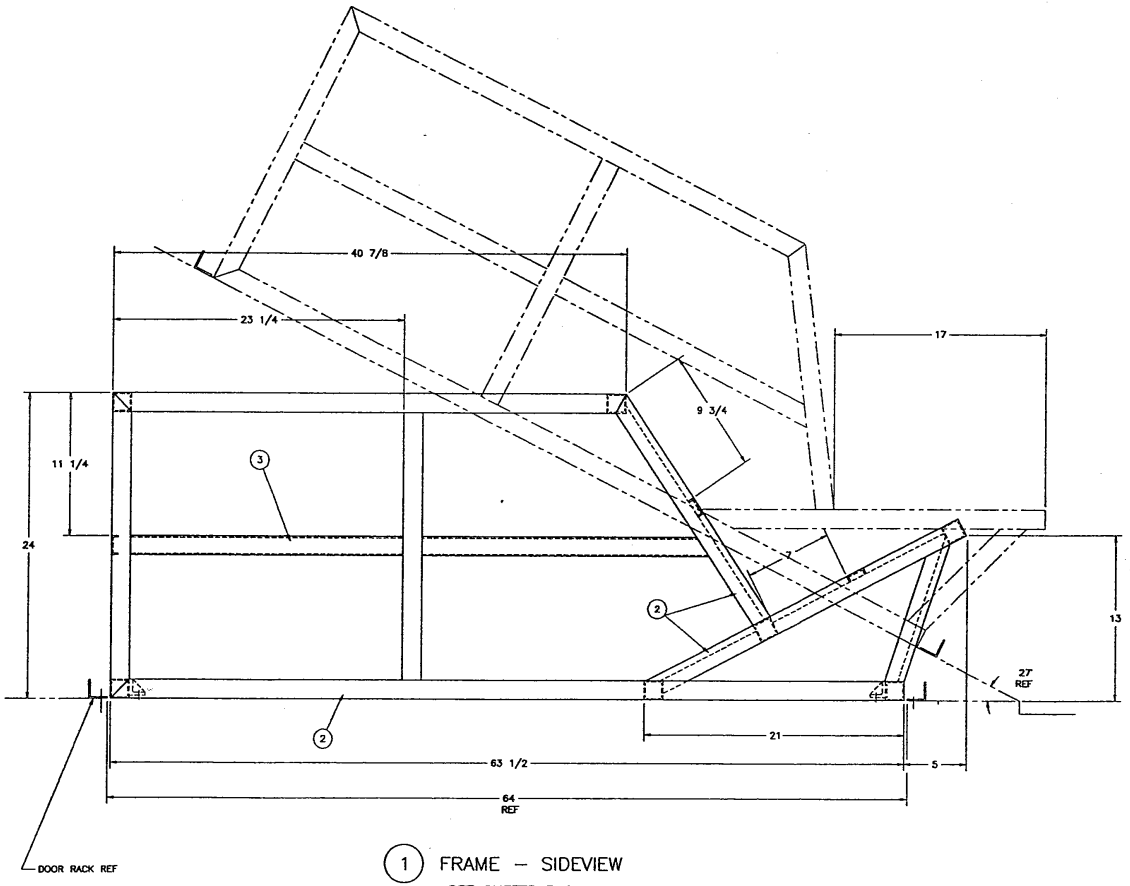

1 FRAME - SIDEVIEW

SEE SHEETS 3 & 4

WELDED CONSTRUCTION

SPECIFIC WELDS NOTED

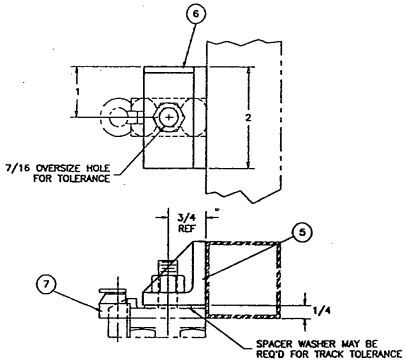

4 TRACK BRACKET

SCALE ~ FULL

UNLESS OTHERWISE SPECIFIED TOLERANCES: FRACTIONS +/- ___ DECIMALS +/- ___ ANGLES +/- ___ DIMENSIONS ARE IN INCHES BREAK SHARP EDGES	DATE / REVISION / BY	U. S. DEPT. OF AGRICULTURE FOREST SERVICE TECHNOLOGY & DEVELOPMENT CENTER MISSOULA, MONTANA
DRAWN BILL WYATT	TITLE	C-23 CARGO BIN FRAME - SIDE VIEW
DESIGNED		
CHECKED		
APPROVED D. PIERCE		
SCALE 1/4	881_23BIN\2FRMSIDE	
DATE SEPT. - 92	SHEET 2 OF ___	MTDC- 881

MATERIAL LIST

NO	PART NAME	REQD	MATERIAL-DESCRIPTION	SHEET
			SEE SHEET 2	

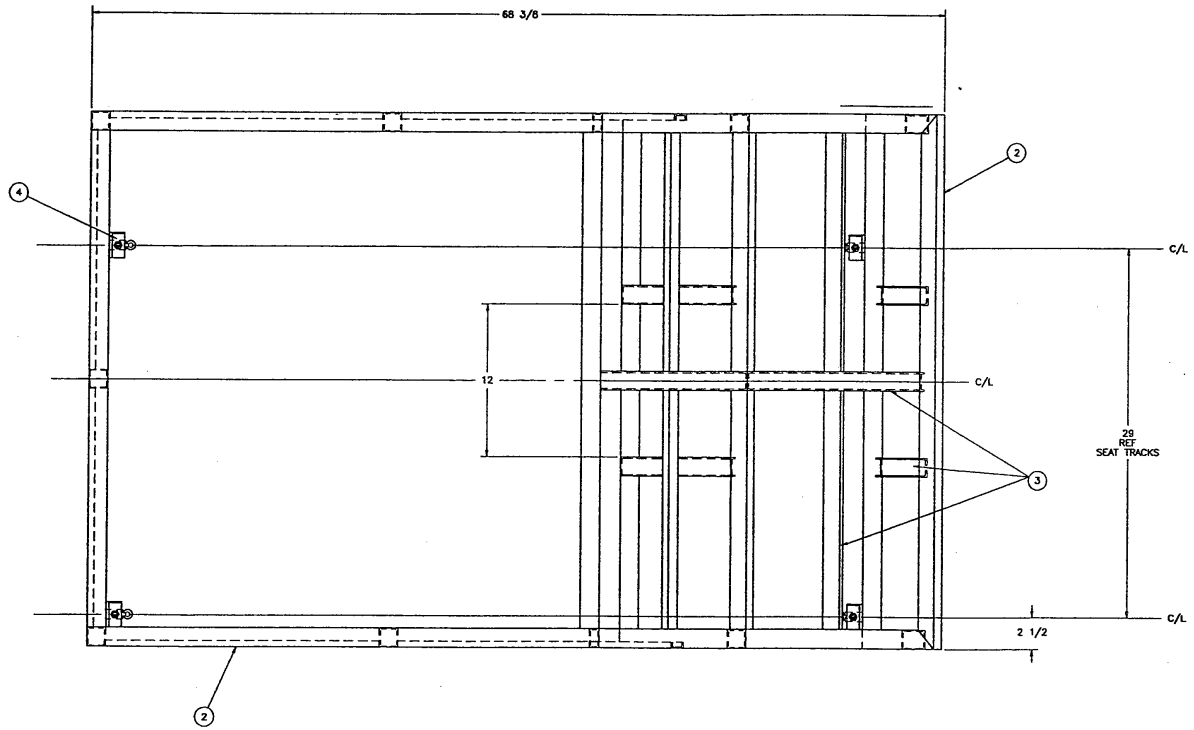

(1) FRAME – TOPVIEW

SEE SHEETS 2 & 4

WELDED CONSTRUCTION
SPECIFIC WELDS NOTED

UNLESS OTHERWISE SPECIFIED TOLERANCES: FRACTIONS +/- ___ DECIMALS +/- ___ ANGLES +/- ___ DIMENSIONS ARE IN INCHES BREAK SHARP EDGES	DATE	REVISION	BY
	U. S. DEPT. OF AGRICULTURE FOREST SERVICE TECHNOLOGY & DEVELOPMENT CENTER MISSOULA, MONTANA		
DRAWN BILL WYATT	TITLE		
DESIGNED	C-23 CARGO BIN		
CHECKED	FRAME – TOP VIEW		
APPROVED D. PIERCE	881_230A\3FRMTOP		
SCALE 1/4			
DATE SEPT. – 92	SHEET 3 OF ___	MTDC– 881	

MATERIAL LIST

NO	PART NAME	REQD	MATERIAL–DESCRIPTION	SHEET
			SEE SHEET 2	

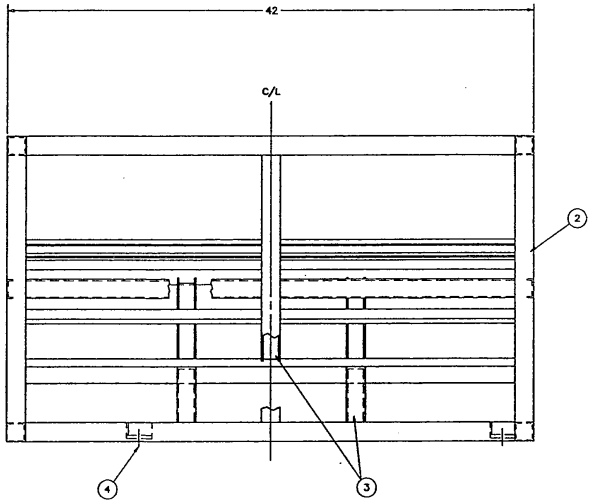

REAR END VIEW

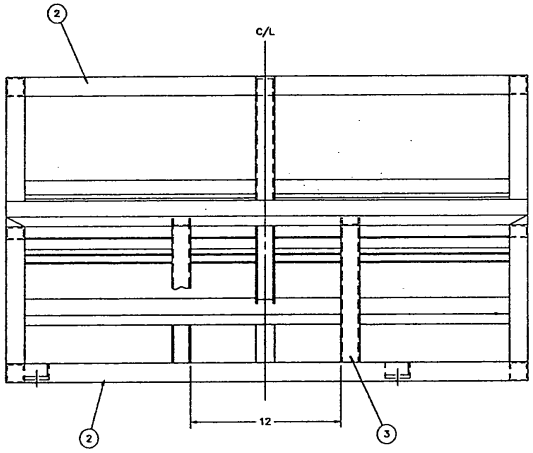

FRONT END VIEW

(1) FRAME – END VIEWS

SEE SHEETS 2 & 3

WELDED CONSTRUCTION
SPECIFIC WELDS NOTED

UNLESS OTHERWISE SPECIFIED TOLERANCES: FRACTIONS +/- ___ DECIMALS +/- ___ ANGLES +/- ___ DIMENSIONS ARE IN INCHES FROM SHOP EDGES	DATE	REVISION	BY
	U. S. DEPT. OF AGRICULTURE FOREST SERVICE TECHNOLOGY & DEVELOPMENT CENTER MISSOULA, MONTANA		
DRAWN BILL WYATT	TITLE C–23 CARGO BIN FRAME – END VIEWS		
DESIGNED			
CHECKED			
APPROVED D. PIERCE			
SCALE 1/4	881_23BIN\4FRMEND5		
DATE SEPT. – 92	SHEET 4 OF ___	MTDC– 881	

MATERIAL LIST

NO	PART NAME	REQD	MATERIAL—DESCRIPTION	SHEET
8	SKIN PANELS	AR	PARTS 9 – 13.	
9	OPEN PANEL	3	RYERSON 1/2 NO. .081F FLATTENED EXPANDED	
			METAL, .060 THK., 5005–H34 ALUM.	
10	OPEN PANEL TRIM	AR	.063 SHEET, 6061 ALUMINUM.	
11	FRONT SOLID PANEL	1	.063 SHEET, 6061 ALUMINUM.	
12	SIDE SOLID PANEL	2	22 X 16 1/4 X 10 5/8 X .063 SHEET, 6061	
			ALUMINUM.	
13	INSIDE PANEL	1	9 5/8 X 39 1/4 X .063 SHEET, 6061 ALUM.	

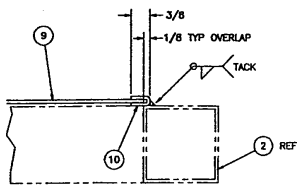

PANEL DETAIL

SCALE ~ FULL

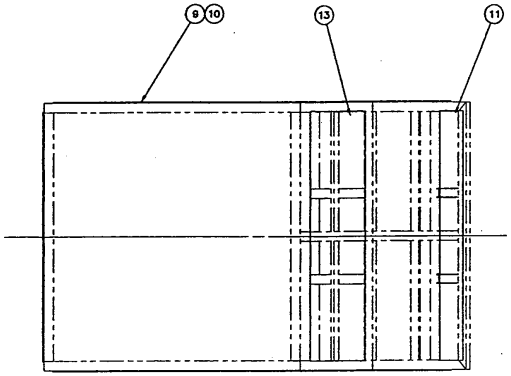

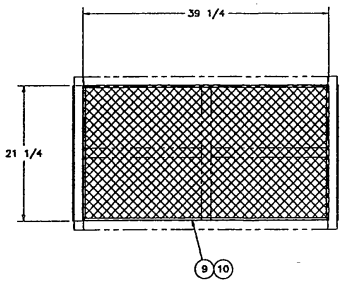

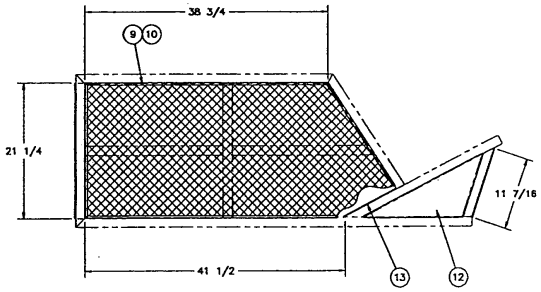

8 SKIN PANELS

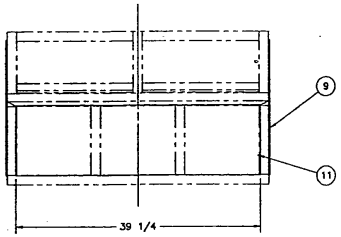

UNLESS OTHERWISE SPECIFIED TOLERANCES: FRACTIONS +/- ___ DECIMALS +/- ___ ANGLES +/- ___ DIMENSIONS ARE IN INCHES BREAK SHARP EDGES	DATE	REVISION	BY
	U. S. DEPT. OF AGRICULTURE FOREST SERVICE TECHNOLOGY & DEVELOPMENT CENTER MISSOULA, MONTANA		
DRAWN BILL WYATT	TITLE		
DESIGNED	C–23 CARGO BIN		
CHECKED	SKIN PANELS		
APPROVED D. PIERCE	881_23BIN\SSKINPANL		
SCALE 1/8			
DATE SEPT. – 92	SHEET 5 OF ___	MTDC– 881	

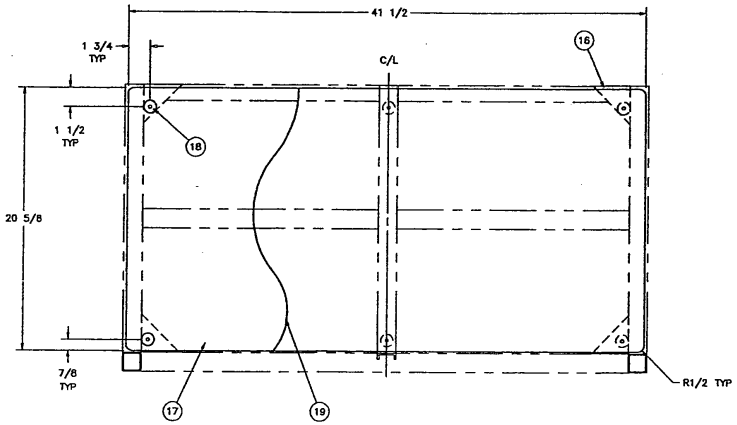

15 SEAT BACK

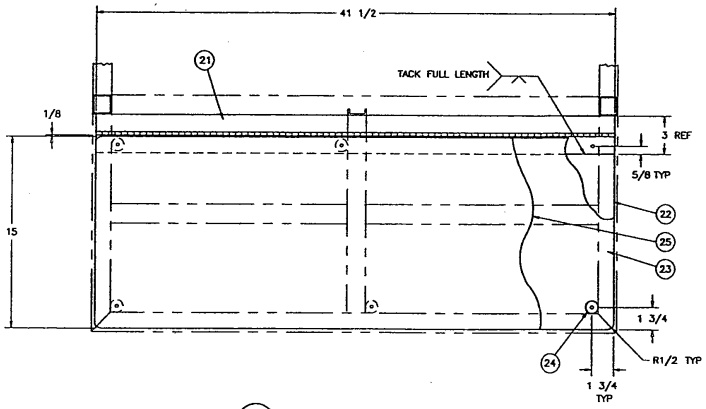

20 SEAT BOTTOM

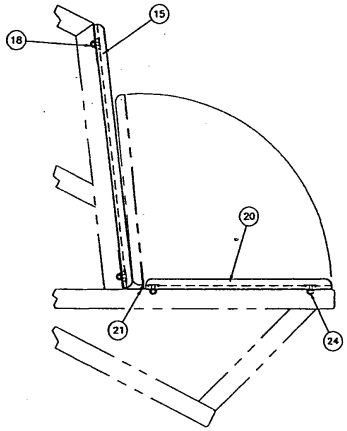

14 SEAT ASSEMBLY

MATERIAL LIST

NO	PART NAME	REQD	MATERIAL—DESCRIPTION	SHEET
14	SEAT ASSEMBLY	1	PARTS 15 – 25.	
15	SEAT BACK	1	PARTS 16 – 19.	
16	CORNER BRACKET	4	3 X 3 X 45 DEG. X .063 SHEET, 6061 ALUM.	
17	BASE	1	1/4 PLYWOOD, A/C GRADE.	
18	BOLT ASSEMBLY	6	1/4–20 X 3/4 FANGED ELEVATOR BOLT W/ NUT & LOCK WASHER.	
19	CUSHION	1	12 OZ. COATED NYLON W/ 1/2 THK. H. DENSITY URETHANE FOAM.	
20	SEAT BOTTOM	1	PARTS 21 – 25.	
21	CONTINOUS HINGE	1	3 X .062 X 1/8 PIN SIZE, ALUMINUM.	
22	SEAT PLATE	1	.063 SHEET, 6061 ALUMINUM.	
23	BASE	1	1/4 PLYWOOD, A/C GRADE.	
24	BOLT ASSEMBLY	6	1/4–20 X 3/4 FANGED ELEVATOR BOLT W/ NUT & LOCK WASHER.	
25	CUSHION	1	12 OZ. COATED NYLON W/ 1/2 THK. H. DENSITY URETHANE FOAM.	

UNLESS OTHERWISE SPECIFIED
TOLERANCES:
FRACTIONS +/- ___
DECIMALS +/- ___
ANGLES +/- ___
DIMENSIONS ARE IN INCHES
BREAK SHARP EDGES

DATE	REVISION	BY

U. S. DEPT. OF AGRICULTURE
FOREST SERVICE
TECHNOLOGY & DEVELOPMENT CENTER
MISSOULA, MONTANA

DRAWN BILL WYATT
DESIGNED
CHECKED
APPROVED D. PIERCE
SCALE 1/4
DATE SEPT. - 92

TITLE
C–23 CARGO BIN
SEAT ASSEMBLY

881_23BIN\BSEAT

SHEET 6 OF ___

MTDC– 881

MATERIAL LIST

NO	PART NAME	REQD	MATERIAL–DESCRIPTION	SHEET
1	PROTECTOR	1	1/8" THICK NEOPRENE	
2	STRAPS	2	6 5/8 x 9/16 x .080 2024–T3	
3	PAN HEAD SCREWS	2	AN525–10R10 W/WASHERS	
4	PAN HEAD SCREWS	4	AN525–10R12	

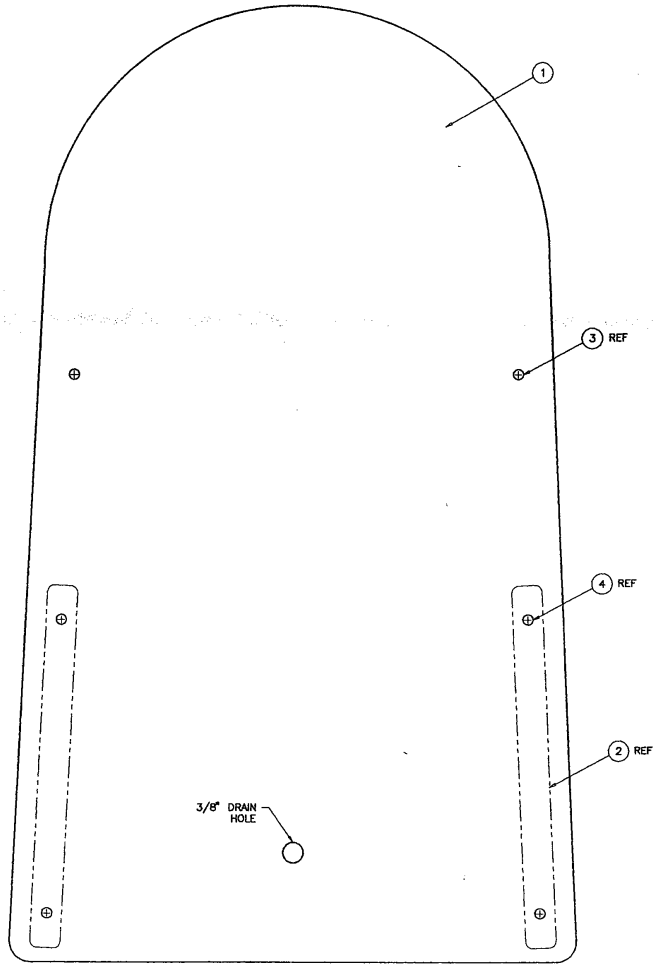

PROTECTOR PATTERN

NOTE:
THIS PROTECTOR IS INSTALLED OVER AN EXISTING FAIRING IN THE CENTER OF THE C–23A HORIZONTAL STABILIZER. IT IS ATTACHED USING EXISTING SCREW HOLES. THE PURPOSE OF THIS DEVICE IS TO PREVENT DEPLOYMENT DAMAGE TO PARACHUTE CANOPIES CAUSED BY CONTACT WITH THE ELEVATOR CONTROL ROD MECHANISM.

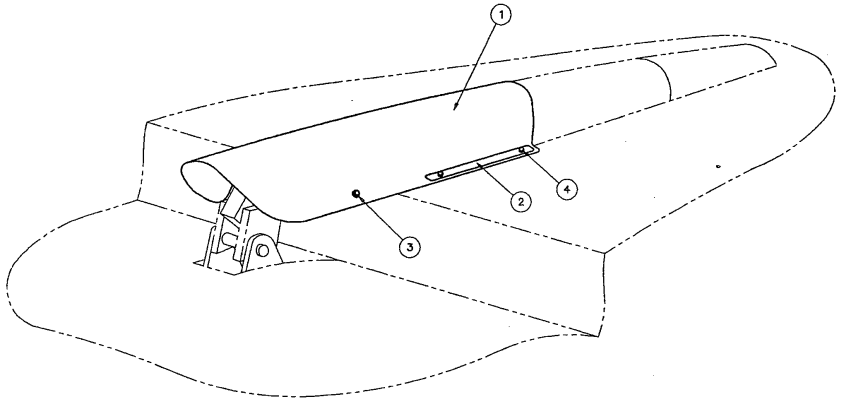

UNLESS OTHERWISE SPECIFIED TOLERANCES: FRACTIONS +/- ____ DECIMALS +/- ____ ANGLES +/- ____ DIMENSIONS ARE IN INCHES BREAK SHARP EDGES	DATE	REVISION	BY
	U. S. DEPT. OF AGRICULTURE FOREST SERVICE TECHNOLOGY & DEVELOPMENT CENTER MISSOULA, MONTANA		
DRAWN W.A.G./WYATT	TITLE C–23A ELEVATOR CONTROL ROD PROTECTOR PATTERN		
DESIGNED			
CHECKED			
APPROVED D. PIERCE			
SCALE FULL	921–1		
DATE APR – 95	SHEET 1 OF 1	MTDC– 921	